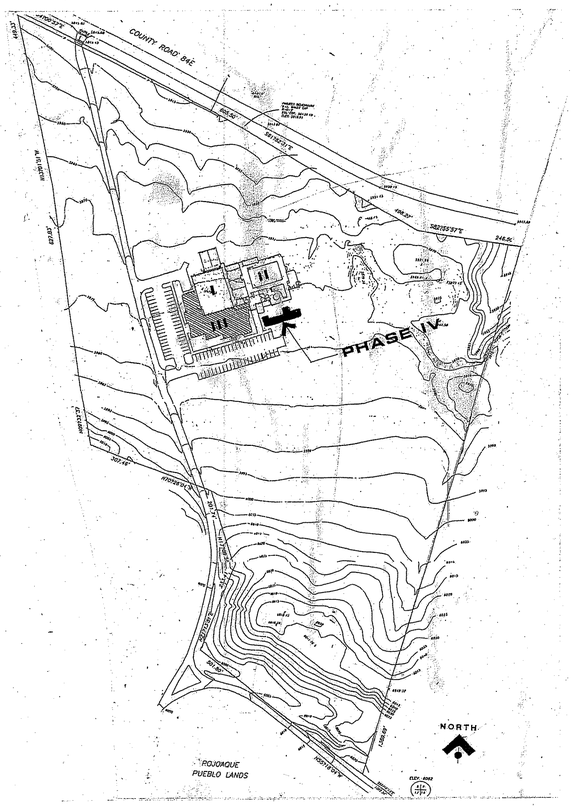

SITE LOCATION PLAN — No scale

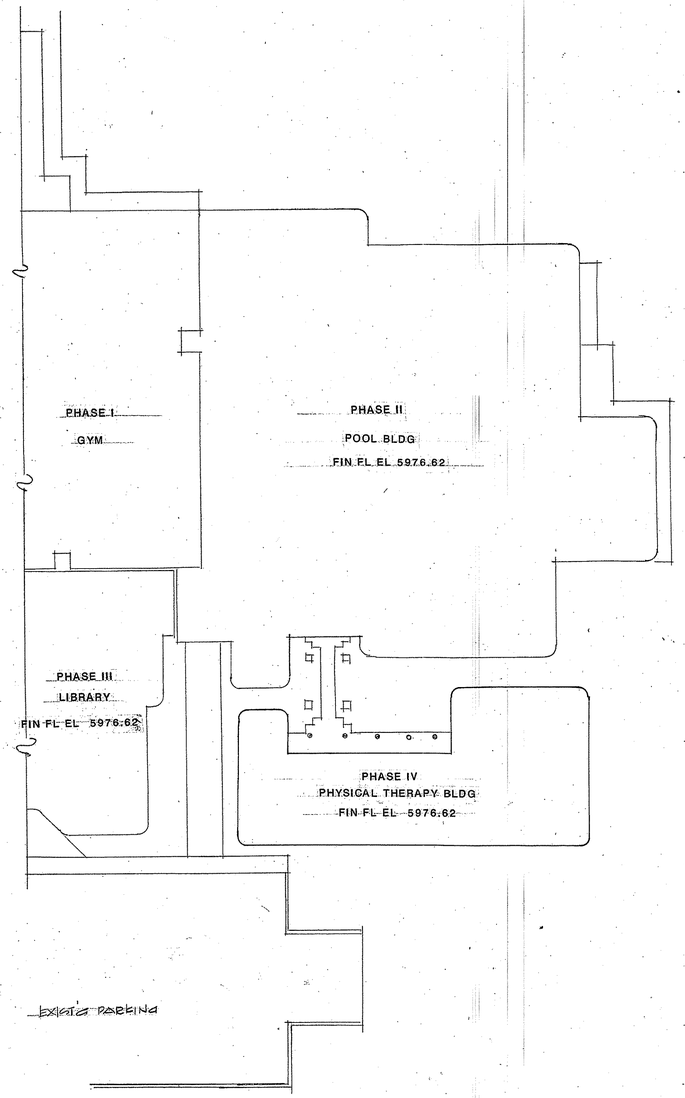

INDEX TO DRAWINGS

C-1	SITE UTILITY PLAN
C-2	SITE GRADING PLAN
S-1	FOUNDATION PLAN AND RELATED DETAILS
S-2	ROOF FRAMING PLAN AND RELATED DETAILS
S-3	MISC. DETAILS
S-4	STRUCTURAL NOTES
S-5	MISC. STRUCTURAL DETAILS
A-1	FLOOR PLAN
A-2	ROOM FINISH SCHEDULE, DOOR SCHEDULE, ADA REQUIREMENTS, MILLWORK ELEVATIONS
A-3	REFLECTED CEILING PLAN, AND BLDG. ELEVATIONS
A-4	WALL SECTIONS
M-1	HVAC PLAN
M-2	HVAC DETAILS AND SCHEDULES
P-1	PLUMBING PLAN
P-2	PLUMBING WATER PLAN
P-3	PLUMBING SPECS AND SCHEDULES
P-4	SEWER RISER DIAGRAMS
E-1	LIGHTING PLAN
E-2	POWER PLAN
E-3	LIGHT FIXTURE SCHEDULE, AND RISER DIAGRAMS

CODE ANALYSIS

PROJECT:	Wellness Center, Phase 4, Pueblo of Pojoaque, New Mexico
OWNER:	Pueblo of Pojoaque
DESCRIPTION:	Single story building, freestanding, to house physical therapy, colonics unit, massage therapy and rehab.
CONSTRUCTION:	Concrete slab on grade, exterior masonry walls, steel bar joists, metal studs, gyp sum board and masonry finishes, with acoustical lay-in ceilings.
CODE:	1997 Uniform Building Code ICI/ANSI A 117.2 – 1986
OCCUPANCY:	Exercising/Rehab
CONSTRUCTION:	Type V-N
FIRE PROTECTION:	Non-sprinklered
SEISMIC ZONE:	2B
NUMBER OF STORIES:	One
SQUARE FOOTAGE:	3,350 SF
OCCUPANT LOAD:	67 (2 exits required)

WELLNESS CENTER - PHASE 4

WAYNE G. ANDREWS A.I.A.
ARCHITECT – PLANNER

4001 Juan Tabo N.E., Suite A
Albuquerque, New Mexico 87111
(505) 275-1764
Fax (505) 298-3471

#7

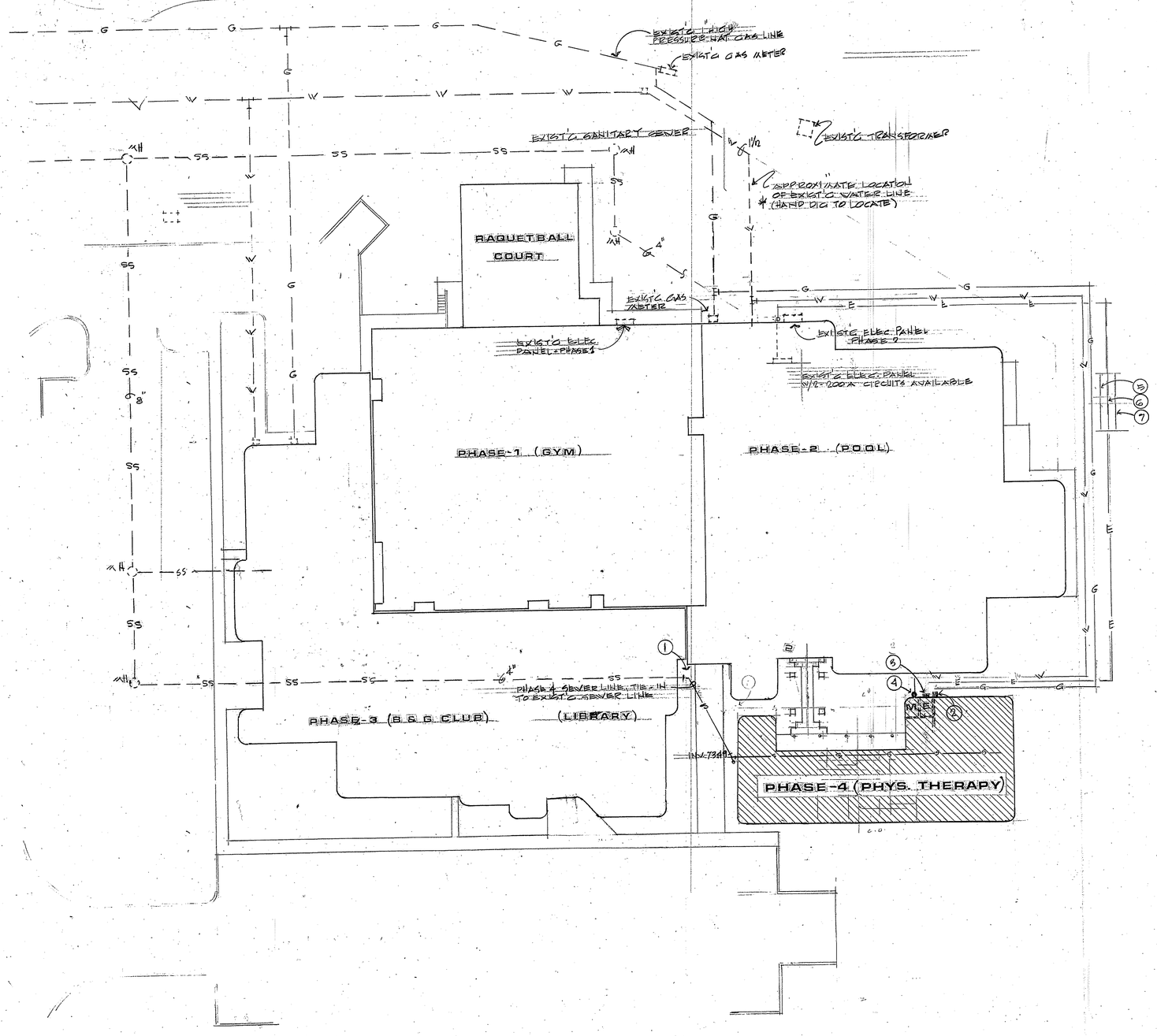

SITE UTILITY PLAN 1"=20'-0"

KEYED NOTES

1. THE NEW SEWER LINE (PHASE 4) INTO SEWER STUB-UP SET IN PHASE 3. STUB-UP INV. 72.12
2. GAS METER
3. ELECT. SWITCH-GEAR
4. MAIN WATER ENTRY TO BUILDING
5. 1 1/2" CONDUIT FOR FIRE ALARM
6. 2 1/2" CONDUIT FOR TELEPHONE

WAYNE G. ANDREWS A.I.A.
ARCHITECT – PLANNER
4001 Juan Tabo N.E. Suite A
Albuquerque, New Mexico 87111
Phone (505) 294-7764
Fax (505) 298-3471

POJOAQUE WELLNESS CENTER

PUEBLO OF POJOAQUE NEW MEXICO

PHASE 4

STATE OF NEW MEXICO WAYNE G. ANDREWS 4193 REGISTERED ARCHITECT

JOB NO.	
DATE	MAR. 7, 2003
DRWN BY	
CHKD BY	
REVISIONS	
SHEET NO	C-1

KEYED NOTES

1. PARKING STALL STRIPING (WHITE)
2. EXISTING CONCRETE SLABS AT H.C. ACCESS
3. NEW ASPHALT PAVING ON EXISTING GRAVEL BASE COURSE. SEE SPECIFICATIONS.
4. COBBLE STONE RUN-DOWN, 1' 0" WIDE x 30' LONG
5. 3/4" GRAVEL SWALE 10' WIDE
6. 5'-0" H "COYOTE" FENCE

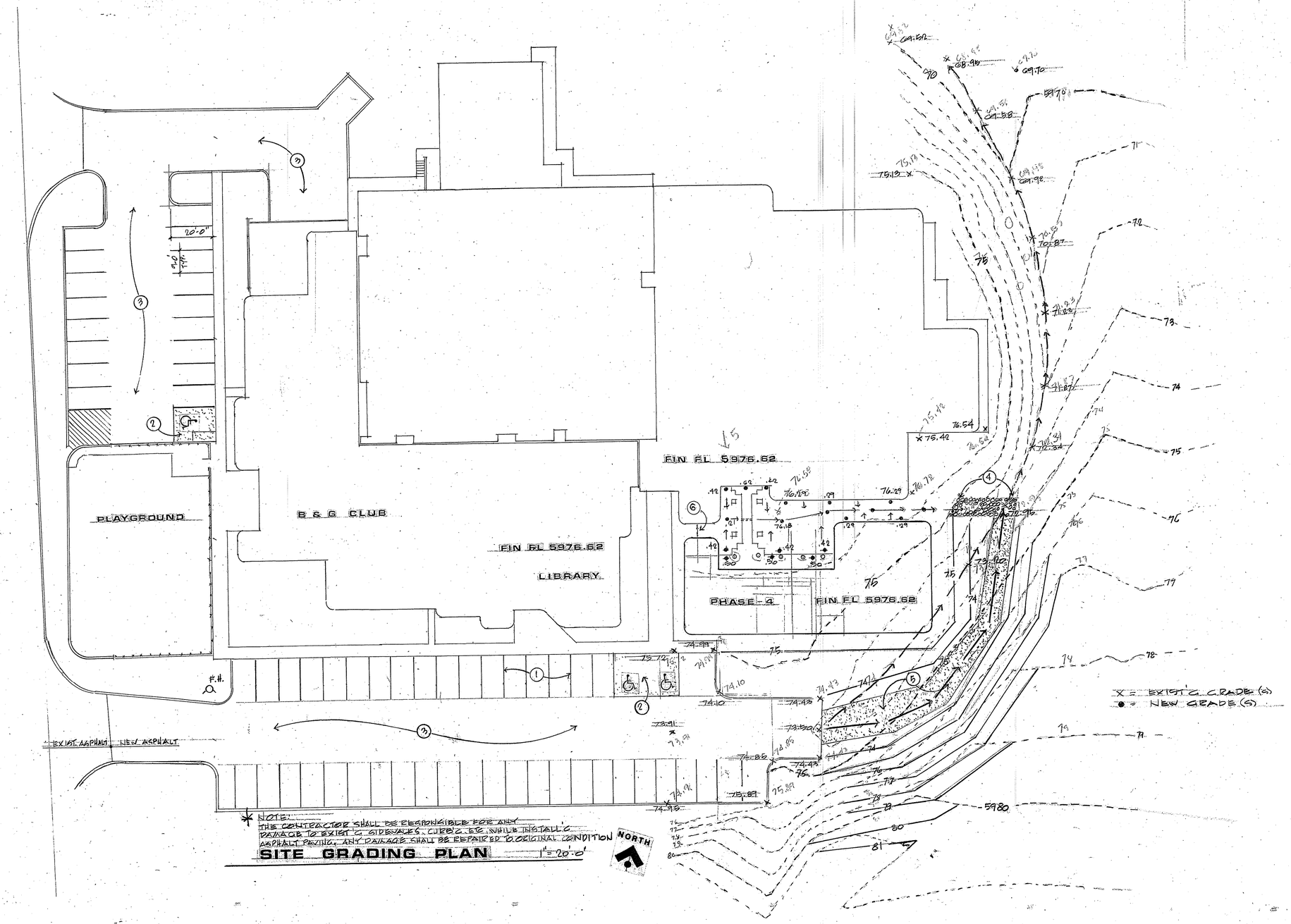

* NOTE:
THE CONTRACTOR SHALL BE RESPONSIBLE FOR ANY DAMAGE TO EXIST'G SIDEWALKS, CURBS, ETC. WHILE INSTALL'G ASPHALT PAVING. ANY DAMAGE SHALL BE REPAIRED TO ORIGINAL CONDITION

SITE GRADING PLAN 1" = 20'-0"

WAYNE G. ANDREWS A.I.A.
ARCHITECT – PLANNER
4001 Juan Tabo N.E., Suite A
Albuquerque, New Mexico 87111
(505) 275-2784
Fax (505) 298-3471

POJOAQUE WELLNESS CENTER

PUEBLO OF POJOAQUE — NEW MEXICO

PHASE 4

JOB NO.	
DATE	MAR. 7, 2003
DRWN BY	
CHKD BY	
REVISIONS	
SHEET NO	C - 2

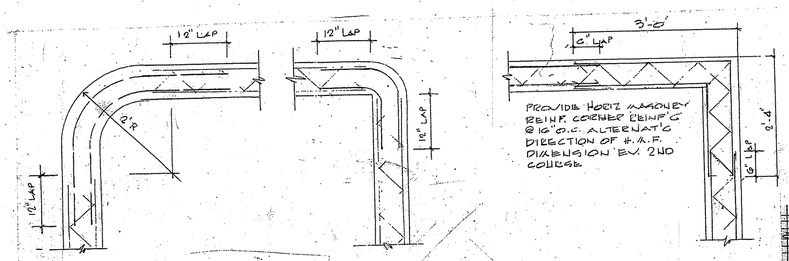

TYPICAL HORIZONTAL MASONRY REINFORCING DETAILS

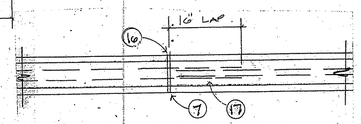

TYP BOND BM CONTROL JOINT

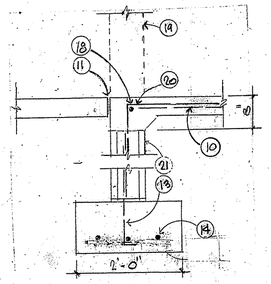

TYP THRESHOLD SLAB AT DOOR OPENINGS

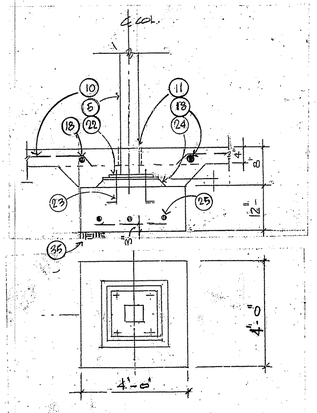

TYP INTERIOR COLUMN FTG

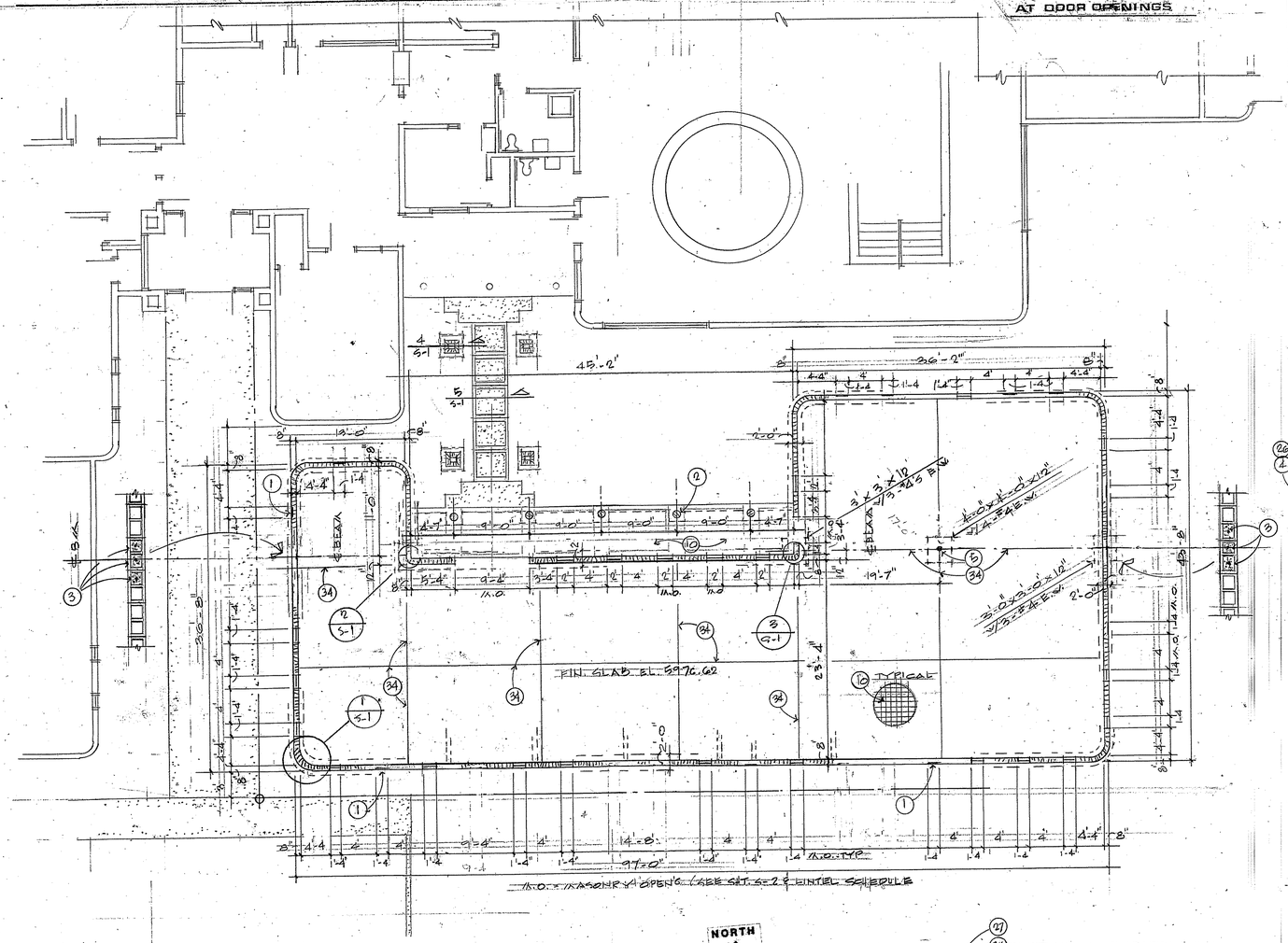

FOUNDATION PLAN 1/8"=1'-0"

NORTH

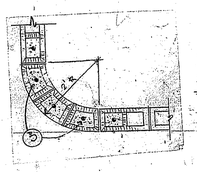

SECTION 1/S-1 1"=1'-0"

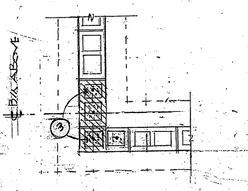

SECTION 2/S-1 1"=1'-0"

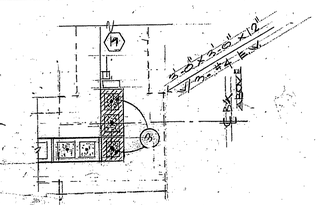

SECTION 3/S-1 1"=1'-0"

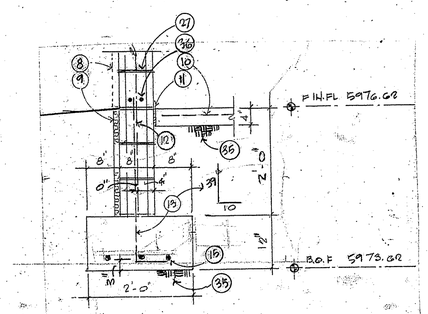

TYP PERIMETER FOOTING 3/4"=1'-0"

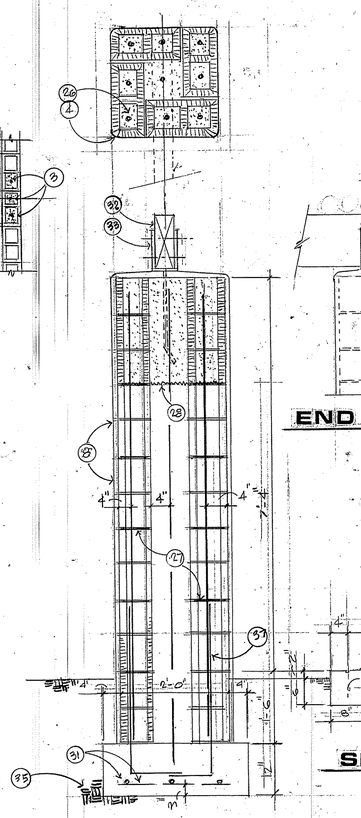

SECTION 4/S-1 3/4"=1'-0"

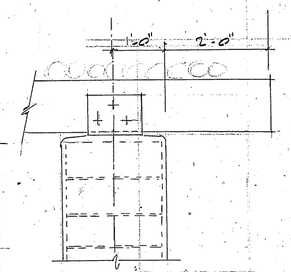

END ELEVATION

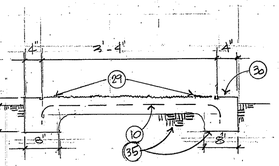

SECTION 5/S-1 3/4"=1'-0"

KEYED NOTES

1. INDICATES RECESSES IN STUCCO FINISH
2. 8" DIAMETER WOOD COLUMNS
3. FLUSH PILASTER/COL. GROUT 3 CELLS FULL W/ 1 - #5 EA. CELL FOR STEEL BM. ABOVE. SEE NOTE 42. SAT. 6-2
4. 8X8X16 BULL-NOSED CMU UNITS
5. TS 4X4X3/8" STL. COL.
6. 30# FELT WRAP – GROUT CORES
7. SEALANT BOTH SIDES
8. EIFS SYSTEM
9. 1 ½" PERIMETER INSULATION
10. 4" CONC. SLAB-ON-GRADE W/ 6X6 – W 1.4 X W 1.4 WWF. PLACED AT MIDDLE OF SLAB, OVER PREPARED SUB-GRADE (AS PER SOILS REPORT)
11. ½" EXP. JOINT
12. #5 @ 24" O.C. (VERT)
13. #5 DOWELS @ 24" O.C. — 4/10
14. #4'S @ 32" O.C.
15. 3 - #5 LONGITUDINAL
16. COMPRESSIVE MATERIAL
17. PROVIDE SLEEVE FOR END REINF'MT
18. 1 - #4 CONT
19. CMU WALL BEYOND
20. #4 DOWELS EA. LEG @ 24" O.C. SPACED @ 24" O.C.
21. CMU STEM WALL GROUT ALL CELLS BELOW GRADE
22. ½"X10"X0'-10" STL. PLATE
23. 4 – ¾" DIAMETER X 10" (A-307) A.B.
24. 1" GROUT LEVEL'G BED W/ ¾" DIAMETER LEVEL'G NUTS
25. 3 - #5' EA. WAY
26. #4'S CONT. – GROUT CELLS (TYP).
27. JOINT REINF. @ 16" O.C. (HORIZ)
28. METAL LATH (2' X 2')
29. EXPOSED AGGREGATE CONC.
30. TROWELED SMOOTH EDGES. SEE PATTERN THIS SHEET
31. 3 - #4'S EA. WAY
32. 6" X 12" DF (TREATED) WOOD BEAM
33. METAL SHOE BM. SUPPORT. 8" X 12" X ½" THICK, W/ 1' 0 LONG REBAR ANCHOR AND 3 – ½" DIAMETER BOLTS W/THREADED ENDS.
34. INDICATES CONC. SLAB CONTROL JOINTS
35. PREPARE SUBGRADE AS PER SOILS REPORT
36. 8" CMU BOND BEAM W/ 2 - #5 CONT.
37. #4 DOWELS 30/12

WAYNE G. ANDREWS A.I.A.
ARCHITECT – PLANNER
4001 Juan Tabo N.E. Suite A
Albuquerque, New Mexico 87111
(505) 275-1764
Fax (505) 298-3471

POJOAQUE WELLNESS CENTER

PUEBLO OF POJOAQUE NEW MEXICO

PHASE 4

JIM J. KAPURANIS NEW MEXICO 10283 REGISTERED PROFESSIONAL ENGINEER 1/6/03

STATE OF NEW MEXICO WAYNE G. ANDREWS 1493 REGISTERED ARCHITECT

JOB NO.	
DATE	MAR. 7, 2003
DRWN BY	
CHKD BY	
REVISIONS	

SHEET NO

S-1

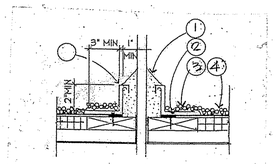

PENETRATION POCKET
1½"=1'-0"

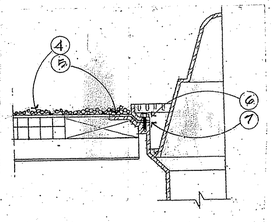

ROOF DRAIN DETAIL N.T.S.

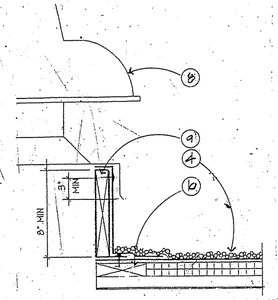

MECHANICAL CURB
1½"=1'-0"

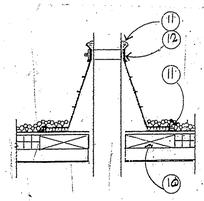

NOTES:
1. PIPE SURFACE MUST BE FREE OF ALL RUST GREASE, ETC.
2. PIPE MUST BE ANCHORED TO BOTTOM SIDE OF DECK TO ASSURE STABILITY.

PIPE FLASHING 1½"=1'-0"

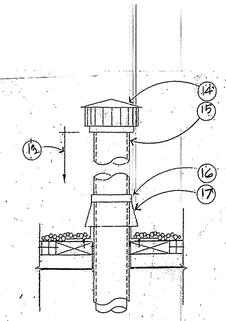

NOTE. HEIGHT OF STACK TO BE SUPPORTED INDEPENDENTLY OF FLASHING AND APPLIANCE

FLUE THRU ROOF DETAIL
N.T.S.

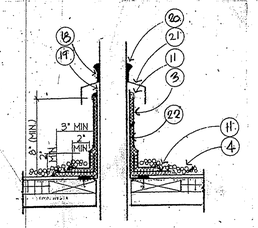

NOTES.
1. USE THIS DETAIL WHEN THE IN-SERVICE TEMPERATURE OF THE PIPE EXCEEDS 180°F.

HOT PIPE ROOF PENETRATION

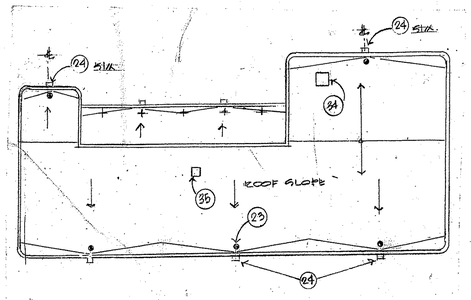

ROOF PLAN 1/10"=1'-0"

CMU LINTEL SCHEDULE

MAX. SPAN	BLK SIZE	TOP REINF.	BOT REINF	REMARKS
3'-0"	8x8	–	2-#5	24" BEARG EA END
4'-0"	8x8	–	2-#5	24" BEARG EA END
6'-0"	8x16	2-#5	2-#5	24" BEARG EA END
9'-0"	8x24	2-#5	2-#5	24" BEARG EA END

* UNLESS OTHERWISE DRAWN OR NOTED

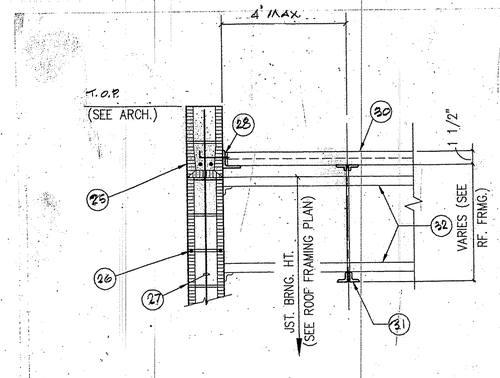

DECK ANGLE TO CMU WALL CONN.
N.T.S.

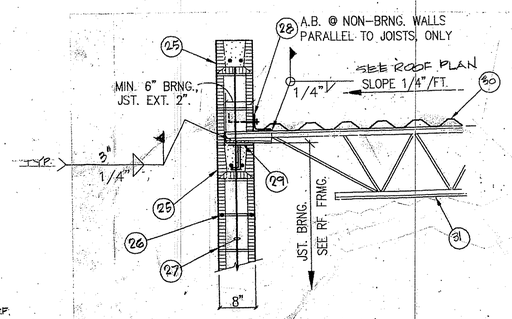

JOIST TO CMU WALL CONNECTION
N.T.S.

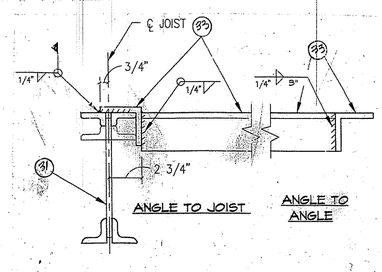

MECH. EQUIP./ROOF PENE. FRAMING SUPPORT N.T.S.

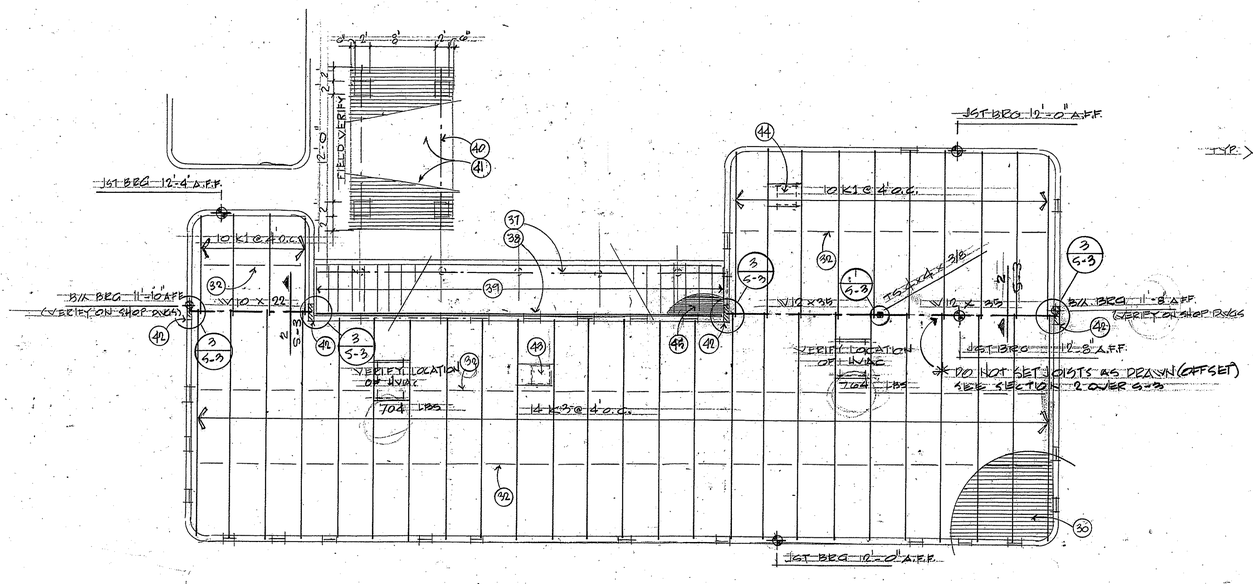

ROOF FRAMING PLAN 1/8"=1'-0"

NORTH

KEYED NOTES

1. SEALER PLACED TO SHED WATER
2. NAIL 6" O.C. W/CORROSION RESISTANT NAILS, 11 GA, 1 ¼" L, W/3/8" DIAMETER HEAD
3. UN-CURED FLASH'G
4. ROOF'G SYSTEM
5. REINF. FLASHING W/LAP ADHESIVE
6. CLAMPING RING
7. T.F. TAPE, 2 COURSES, FORM IN GASKET BETW. BOWL AND RING.
8. MECHANICAL HOOD/UNIT
9. 2 x TREATED WOOD CURB
10. TREATED WOOD NAILER
11. LAP SEALANT
12. STAINLESS STEEL CLAMP'G RING
13. MIN. 2'-0" ABOVE ROOF
14. ANTI-BACK DRAFT TYPE FLUE CAP
15. TYPE "B" DBL MET. FLUE THRU ROOF. SEE PLANS FOR SIZES
16. SOLDER
17. COUNTER-FLASHING
18. STAINLESS STL. CLMP'G RING
19. SPACE AS REQ'D TO KEEP MEMBRANE BELOW 180 DEGREES
20. SEALANT
21. HOOD
22. METAL SLEEVE, FASTEN TO DECK
23. ROOF DRAIN DOWN IN CMU
24. INDICATES OVERFLOW CANALES. CENTER ON WINDOWS BELOW ON SOUTH ELEVATION. CENTER ON WALL ON NORTH ELEVATION. SEE SHT. A-3
25. 8" x 8 CONT CMU BOND BM. W/2 - #5'S CONTINUOUS LONGIT. @ F.F. LEVEL, @ 7'-4" A.F.F. AND @ JOIST BRG. AND/OR TOP OF WALL
26. NO. 9 GAGE, TRUSS TYPE DUROWALL @ 16" O.C.
27. 8" CMU WALL W/#5'S @ 24" O.C. VERT. REINF. AS SHOWN ON PLANS
28. 3" x 3" x 3/8" CONT. ROOF DECK ANGLE (USE ¾" DIAMETER x 12" A.B. @ 32" O.C. @ CMU WALLS
29. 7" x 7" x ½" PLATE, W/2 – 5/8" DIAMETER x 6" H.A.S.
30. 1 ½" TYPE B, 20 GA. METAL ROOF DECK (SEE SHT. S-1 FOR SPEC.)
31. STEEL ROOF JOIST, TOP CHORD BRG (SEE ROOF FRM'G PLAN)
32. < 1 x 1 x 1/8 HORIZ. BRIDGING CONT. ANGLE AT TOP AND BOTTOM CHORD OF JOIST
33. < 3 ½ x 3 ½ x ¼" SECONDARY STEEL FRAMING
34. ~~½" C.D. PLYWOOD DECKING~~
35. N.A.
36. STEEL BEAM
37. 6 x 12 DF #2
38. 2 x 8 LEDGER, BOLTED TO CMU W/1/2" DIAMETER EXPAN. BOLTS@ 32" O.C. E. BOLTS = 6" LONG
39. 2 x8'S @ 16" O.C. ATTACH TO 2 x 8 LEDGER W/JOIST HANGERS. SEE SHT. A-4
40. 6 x 12 DF (TREATED WOOD BM)
41. 2 x 6'S (TREATED) W/2 x 6 SPACERS (4" LONG) @ MID-SPAN AND COVER BOTH BEAMS
42. FLUSH C.M.U. PILASTER/COL. STEEL BM (ABOVE) SUPPORT. SEE DTL. THIS SHEET
43. COORDINATE EXACT LOCATION OF 2' x 2' SKYLIGHT
44. COORDINATE EXACT LOCATION OF ROOF HATCH. SEE SHT. A-1 AND SHT. S-3
45. 7/16" RATED SHEATH'G. NAIL W/ 8d @ 6" O.C. BOUNDARY & EDGES, & 12" O.C. FIELD.

WAYNE G. ANDREWS A.I.A.
ARCHITECT – PLANNER
4001 Juan Tabo N.E. Suite A
Albuquerque, New Mexico 87111
(505) 275-1764
Fax (505) 298-3471

POJOAQUE WELLNESS CENTER

PUEBLO OF POJOAQUE — NEW MEXICO

PHASE 4

JIM J. KAPURANIS — NEW MEXICO — REGISTERED PROFESSIONAL ENGINEER — 10023 — 3/6/03

STATE OF NEW MEXICO — WAYNE G. ANDREWS — 1993 — REGISTERED ARCHITECT

JOB NO.	
DATE	MAR. 7, 2003
DRWN BY	
CHKD BY	
REVISIONS	
SHEET NO	S-2

KEYED NOTES

1. 3'-0" X 2'-6" ROOF SCUTTLE
2. COUNTER-FLASHING
3. ROOFING MEMBRANE OVEN TREATED WOOD NAILER, FASTENED AT 1½" O.C.
4. MECH. ATTACHED MEMBRANE OVER POLY 150 INSULATION
5. STEEL ANGLE. SEE STRUCT.
6. STL BAR JOIST(S)
7. ROOF LADDER
8. ¼" X 3" BENT PLATE
9. RADIUS TOP.
10. FURNISH SAFETY POST W/ROOF SCUTTLE
11. 3/8" X 8 ½" X ¼" BENT STL. PLATE @ 5'-0" O.C. MAX WELD TO LADDER, BOLT TO C.M.U.
12. 3/8" X 8 ½" X ¼" BENT STL. PLATE @ 5'-0" O.C. MAX WELD TO LADDER, BOLT TO C.M.U.
13. ½" X 2 ½" X LENGTH REQ'D CONTINUOUS STL. BAR. DRILL TO RECEIVE ¾" O.D. STL ROD
14. 2" X 2" X ¼" STL. ANGLE WELDED TO LADDER AND BOLT TO FLOOR.
15. TS COL. – SEE SHT. S-2
16. 3/8" X 3" X 0'-9" PLATE W/ 3 ¾" DIAMETER, (A-307) BOLTS – TYP.
17. STEEL BM'S – SEE SHT. S-2
18. W10 X 22 STL. BM
19. W12 X 35 STL. BM
20. STEEL JOISTS
21. METAL DECK
22. ½" X 6" X 1'-0" PLATE W/3 – ¾" DIAMETER X 6" H.A.S.

WAYNE G. ANDREWS A.I.A.
ARCHITECT – PLANNER
4001 Juan Tabo N.E., Suite A
Albuquerque, New Mexico 87111
(505) 292-7246
Fax: (505) 298-3471

POJOAQUE WELLNESS CENTER

PUEBLO OF POJOAQUE NEW MEXICO

PHASE 4

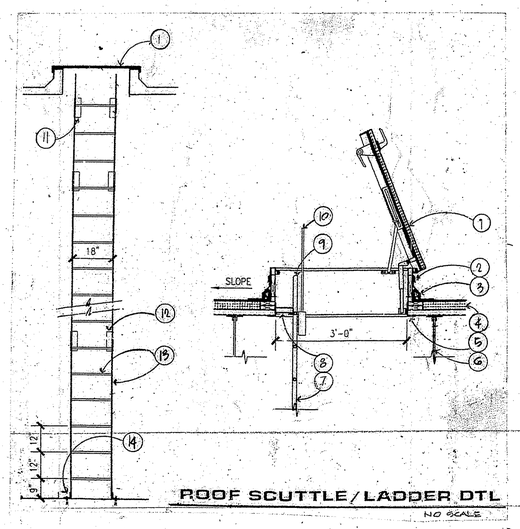

ROOF SCUTTLE/LADDER DTL
NO SCALE

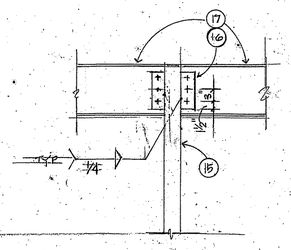

SECTION 1 S-3 3/4"=1'-0"

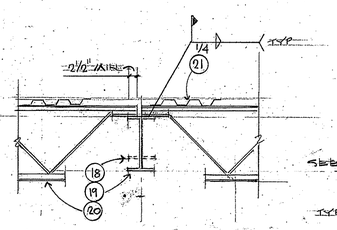

SECTION 2 S-3 3/4"=1'-0"

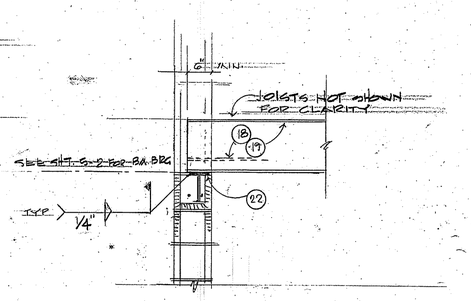

SECTION 3 S-3 3/4"=1'-0"

JIM J. KAPURANIS
NEW MEXICO
10283
REGISTERED PROFESSIONAL ENGINEER
3/6/03

STATE OF NEW MEXICO
WAYNE G. ANDREWS
REGISTERED ARCHITECT

JOB NO.	
DATE	MAR. 7, 2003
DRWN BY	
CHKD BY	
REVISIONS	

SHEET NO.
S - 3

DESIGN LOADS

- GOVERNING CODES :
  1997 UBC
- VERTICAL (GRAVITY) LOADINGS :

DESCRIPTION	DEAD (PSF)	LIVE (PSF)
ROOF	20	20
(TYP) FLOOR		
BALCONIES		
CORRIDORS	N/A	N/A
STAIRS	N/A	N/A

- LATERAL LOADINGS :

DESCRIPTION	PARAMETERS
WIND	75 mph, exposure C Qs = 15 psf, I = 1.0,
SEISMIC	Zone 2B Z = .2, R = 4.5, Ca = .34

- SOIL PRESSURES :
  (SOILS REPORT PROVIDED BY GEO-TEST #1-80109 DATED 1/23/98)

DESCRIPTION	PRESSURES
FOOTINGS/SLAB	2000 PSF
ACTIVE PRESSURES	35 PCF/FT
AT REST PRESSURES	55 PCF/FT
PASSIVE PRESSURES	325 PCF/FT
COEF. OF FRICTION	.40

GENERAL NOTES

- TYPICAL DETAILS AND NOTES ON THESE SHEETS SHALL APPLY UNLESS SPECIFICALLY SHOWN OR NOTED OTHERWISE. CONSTRUCTION DETAILS NOT FULLY SHOWN OR NOTED SHALL BE SIMILAR TO DETAILS SHOWN FOR SIMILAR CONDITIONS. ALL WORK, MATERIALS AND CONSTRUCTION SHALL COMPLY WITH ALL APPLICABLE BUILDING CODES, REGULATIONS AND SAFETY REQMT'S.
- THE CONTRACTOR SHALL INFORM THE ENGINEER IN WRITING DURING THE BIDDING PERIOD OF ANY DISCREPANCIES OR OMMISIONS NOTED ON THE DRAWINGS OR IN THE SPECIFICATIONS OR OF ANY VARIATIONS NEEDED IN ORDER TO CONFORM TO CODES, RULES AND REGULATIONS. UPON RECEIPT OF SUCH INFORMATION, THE ENGINEER WILL SEND WRITTEN INSTRUCTIONS TO ALL CONCERNED. ANY SUCH DISCREPANCY, OMMISION, OR VARIATION NOT REPORTED SHALL BE THE RESPONSIBILITY OF THE CONTRACTOR AND WORK SHALL BE REPORTED IN A MANNER AS DIRECTED BY THE ENGINEER.
- THE CONTRACTOR SHALL VERIFY ALL DIMENSIONS, CONDITIONS AND ELEVATIONS AT THE JOB SITE DURING CONSTRUCTION AND DURING ANY DISCREPANCIES TO THE ATTENTION OF THE ENGINEER BEFORE PROCEEDING WITH ANY WORK INVOLVED.
- NO STRUCTURAL CHANGE FROM THE APPROVED PLANS AND SPECIFICATIONS SHALL BE MADE IN THE FIELD UNLESS WRITTEN APPROVAL IS OBTAINED PRIOR TO MAKING SUCH CHANGE. CHANGES WITHOUT THE WRITTEN APPROVAL SHALL BE THE RESPONSIBILITY OF THE CONTRACTOR. THE CONDITION SHALL BE REPAIRED OR REPLACED AS DIRECTED.
- THE MECHANICAL CONTRACTOR SHALL COORDINATE INSTALLATION OF THE REQUIRED INSERTS WITH THE GENERAL CONTRACTOR. REFER TO MECHANICAL DRAWINGS FOR SUPPORT STRUCTURES AND INSERTS.
- THE MECHANICAL CONTRACTOR SHALL FURNISH ALL NECESSARY STRUCTURES FOR MECHANICAL EQUIPMENT, HANGING DEVICES AND INSERTS FOR INSTALLATION OF MECHANICAL EQUIPMENT.
- CONSULT MECHANICAL AND ELECTRICAL DRAWINGS FOR ALL CHASES, SLEEVES, OPENINGS, DUCTS, ETC. AS REQUIRED.
- THE CONTRACTOR SHALL BE SOLEY RESPONSIBLE FOR ALL EXCAVATION PROCEDURES INCLUDING LAGGING, SHORING AND PROTECTION OF ADJACENT PROPERTY, STRUCTURES, STREETS AND UTILITIES IN ACCORDANCE WITH THE LOCAL BUILDING DEPARTMENT.
- BACKFILL BEHIND RETAINING WALLS SHALL NOT BE PLACED UNTIL (7) DAYS AS A MINIMUM AFTER THE WALLS ARE SUPPORTED BY THE COMPLETION OF INTERIOR FLOOR SYSTEMS WHERE APPLICABLE UNLESS WALLS ARE ADEQUATELY BRACED. BACKFILL BEHIND FREE STANDING WALLS SHALL NOT PROCEED UNTIL WALL MATERIALS HAVE ACHIEVED DESIGN STRENGTH UNLESS WALLS ARE BRACED ADEQUATELY. BACKFILL SHALL NOT BE PLACED UNTIL AFTER COMPLETION AND INSPECTION OF WATERPROOFING WHERE WATERPROOFING OCCURS.
- TEMPORARY BRACING SHALL BE PROVIDED AS REQUIRED TO HOLD ALL COMPONENTS OF THE STRUCTURE IN PLACE UNTIL FINAL SUPPORT IS SECURELY ANCHORED.
- ANY INSPECTIONS, SPECIAL OR OTHERWISE, THAT ARE REQUIRED BY THE BUILDING CODES, LOCAL BUILDING DEPARTMENTS OR THESE PLANS SHALL BE DONE BY THE ENGINEER, AN INDEPENDENT INSPECTION COMPANY OR THE BUILDING DEPARTMENT. JOB SITE VISITS BY REPRESENTATIVES OF SUCH AND ASSOCIATES DO NOT CONSTITUTE AN OFFICIAL INSPECTION, UNLESS SPECIFICALLY CONTRACTED FOR.
- SHOP DRAWINGS ARE AN AID FOR FIELD PLACEMENT AND ARE SUPERSEDED BY THE STRUCTURAL DRAWINGS. IT SHALL BE THE RESPONSIBILITY OF THE GENERAL CONTRACTOR TO MAKE CERTAIN THAT ALL CONSTRUCTION IS IN FULL AGREEMENT WITH THE LATEST STRUCTURAL DRAWINGS.
- THE CONTRACTOR SHALL SUPPLY THE ENGINEER WITH ONE SEPIA COPY OF SHOP DRAWINGS A MINIMUM OF (1) WEEK PRIOR TO PLACEMENT. THE REVIEW OF SHOP DRAWINGS BY THE ENGINEER IS ONLY FOR GENERAL COMPLIANCE WITH THE STRUCTURAL DRAWINGS AND SPECIFICATIONS. THIS REVIEW DOES NOT GUARANTEE IN ANY WAY THAT THE SHOP DRAWINGS ARE CORRECT NOR DOES IT INFER THAT THEY SUPERCEDE THE STRUCTURAL DRAWINGS.

SHOP DRAWINGS	
CONCRETE REINFORCING	MASONRY
CONCRETE MIX DESIGN	OPEN WEB JOIST LAYOUT
STEEL	

CONCRETE

- PROTECT FRESHLY POURED CONCRETE FROM PREMATURE DRYING AND EXCESSIVE COLD OR HOT TEMPERATURES. START CURING AS SOON AS FREE WATER HAS DISAPPEARED FROM THE CONCRETE SURFACE AFTER PLACING AND FINISHING. KEEP CONTINUOUSLY MOIST FOR AT LEAST (14) DAYS ACCORDING TO ACI 301 PROCEDURES.
- PROTECT CONCRETE FROM DAMAGE OR REDUCED STRENGTHCAUSED BY FROST, FREEZING ACTIONS OR LOW TEMPERATURES IN COMPLIANCE WITH ACI 306. WHEN TEMPERATURES FALL BELOW (40) DEGREES FAHRENHEIT, UNIFORMLY HEAT WATER AND AGGREGATES BEFORE MIXING TO OBTAIN A CONCRETE MIXTURE TEMPERATURE OF NOT LESS THAN 50 DEGREES FAHRENHEIT AND NOT MORE THAN 60 DEGREES FAHRENHEIT AT POINT OF PLACEMENT.
- PROTECT CONCRETE FROM DAMAGE OR REDUCED STRENGTH CAUSED BY HIGH TEMPERATURES IN COMPLIANCE WITH ACI 305. UNIFORMLY COOL WATER AND AGGREGATES BEFORE MIXING TO OBTAIN A CONCRETE MIXTURE TEMPERATURE OF NOT GREATER THAN 90 DEGREES FAHRENHEIT AT POINT OF PLACEMENT.
- REMOVE ALL DEBRIS FROM FORMS BEFORE CURING
- CONCRETE SHOULD NOT BE DROPPED THROUGH REINFORCING STEEL SO AS TO CAUSE SEGREGATION OF AGGREGATES. USE HOPPERS, CHUTES OR TRUNKS OF VARIOUS LENGTHS SO THAT THE FREE UNCONFINED FALL OF CONCRETE SHALL NOT EXCEED (5) FEET, AND A SUFFICIENT NUMBER SHALL BE USED TO ENSURE THE CONCRETE IS KEPT LEVEL AT ALL TIMES.
- ALL ITEMS TO BE CAST IN CONCRETE SUCH AS REINFORCING, DOWELS, BOLTS, ANCHORS, PIPES, SLEEVES ETC. SHALL BE SECURELY POSITIONED IN THE FORMS BEFORE PLACING THE CONCRETE.
- THE CONTRACTOR SHALL OBTAIN THE ENGINEERS APPROVAL OF CONSTRUCTION JOINT LOCATIONS IN FOOTINGS. CONSTRUCTION JOINTS AND CONTROL JOINTS IN SLABS ON GRADE SHALL BE LOCATED AT 20'-0" O.C. MAX. UNLESS OTHERWISE NOTED ON PLANS. IF SAWCUTTING IS USED FOR THE CONTROL JOINTS, THE CUTS SHALL BE MADE WITHIN (7) HOURS AFTER POURING CONCRETE BUT AFTER CURING TO A DEGREE THAT WILL PREVENT THE DISTURBANCE OF THE CONCRETE AGGREGATE.
- CONTINUOUS FOOTING REINFORCEMENT SHALL HAVE A MINIMUM LAP OF (30) BAR DIA. BUT NOT LESS THAN (12) INCHES, AND THE SPLICES IN ADJACENT BARS SHALL BE NOT LESS THAN (3) FEET APART.
- ALL DIMENSIONS SHOWING THE LOCATION OF REINFORCING STEEL NOT NOTED AS "CLEAR" ARE TO CENTER OF STEEL. MINIMUM REBAR COVER FOR CONCRETE SHALL BE AS FOLLOWS:

	MIN. COVER	TOLERANCES + OR -
CAST AGAINST PERM. EXPOSED TO EARTH	3"	3/8"
EXPOSED TO EARTH OR WEATHER		
NO. 5 AND SMALLER BARS	1-1/2"	3/8"
NO. 6 AND LARGER BARS	2"	3/8"
SLAB ON GRADE	1-1/2"	1/4"

- TOLERANCES FOR LONGITUDINAL LOCATION OF BENDS AND ENDS OF REINFORCEMENT SHALL BE PLUS OR MINUS (2) INCHES EXCEPT AT DIS-CONTINUOUS ENDS OF MEMBERS WHERE TOLERANCES SHALL BE PLUS OR MINUS 1/2 INCH.
- REINFORCING FOR CONCRETE POURED ON GRADE SHALL BE SUPPORTED BY STEEL CHAIRS.
- ALL HARDROCK CONCRETE SHALL BE OF REGULAR WEIGHT OF 150 POUNDS PER CUBIC FOOT.
- AGGREGATE SIZE SHALL CONFORM TO ASTM C33.
- CEMENT SHALL BE TYPE II AND SHALL CONFORM TO ASTM C130.
- DRYPACK CONCRETE SHALL BE ONE PART PORTLAND CEMENT AND ONE PART SAND WITH SUFFICIENT WATER TO ALLOW A SMALL AMOUNT OF PASTE TO COME TO THE SURFACE.
- CONCRETE GROUT SHALL BE NON-SHRINKING WITH SUFFICIENT WATER TO ALLOW POURING. ULTIMATE COMPRESSIVE STRENGTH (F'c) AT (28) DAYS SHALL BE EQUAL TO 4000 PSI (MIN).
- CONCRETE MIXES SHALL BE DESIGNED BY A CERTIFIED INDEPENDENT LABORATORY IN ACCORDANCE WITH UBC 2605 (d) OR 2605 (e). A STATEMENT OF MIX DESIGN AND STRENGTH TESTS THEREOF SHALL BE MADE FOR ALL MIX DESIGNS. COPIES SHALL BE SUBMITTED TO THE ENGINEER FOR REVIEW PRIOR TO USE.
- NO MORE THAN 90 MINUTES SHALL ELAPSE BETWEEN CONCRETE BATCHING AND CONCRETE PLACEMENT UNLESS APPROVED BY TESTING AGENCY. CONCRETE SHALL BE PLACED WITHIN 15 MINUTES AFTER DISCHARGE.
- ONE GRADE OF CONCRETE SHALL BE POURED AT THE JOB SITE AT ANY ONE TIME.
- EXPANSION ANCHORS SHALL BE RAMSET/RED HEAD OR EQUAL. INSTALLATION SHALL CONFORM TO REQUIREMENTS OF ICBO REPORT #1572.
- ALL REBAR OR BOLTS SHOWN ANCHORED TO EXISTING CONCRETE SHALL BE INSTALLED IN ACCORDANCE WITH THE EPOXY SYSTEM BY RAMSET/RED HEAD OR EQUAL (U.O.N). INSTALLATION SHALL BE IN CONFORMANCE WITH RECOMMENDATIONS IN ICBO #4265.
- UNLESS DIMENSIONED OTHERWISE, CENTER CONTINUOUS FOOTINGS ON WALL.
- WHERE COLUMN AND WALL FOOTINGS INTERSECT, CAST THESE MONOLITHIC AND CONTINUE WALL FOOTING REINFORCING THROUGH THE COLUMN FOOTING.
- CENTER COLUMN FOOTINGS ABOUT COLUMN CENTER LINES BOTH WAYS, UNLESS DIMENSIONED OTHERWISE.

CONCRETE (CONT'D)

- DEPRESS TOP OF CONCRETE STEM WALLS 8" AT ALL DOORS.

CONCRETE QUALITY :

CONCRETE USE	STRENGTH @ 28 DAYS	MAX. SLUMP	AIR	MAX. AGG.	AGG. TYPE
EXT.WALKS AND CURBS	4000 PSI	6"	4 %	1-1/2"	HARD-ROCK
GRADE SLAB	3000 PSI	4"		1-1/2"	HARD-ROCK
SPREAD FOOTINGS	3000 PSI	4"		1-1/2"	HARD-ROCK
CONTINUOUS FOOTINGS & STEMS	3000 PSI	4"		1-1/2"	HARD-ROCK

CONCRETE REINFORCING

- ALL REINFORCING STEEL SHALL BE NEW STOCK DEFORMED BARS CONFORMING TO ASTM A615 AS FOLLOWS:
  #3 BARS..... GRADE 40
  #4 & LARGER BARS..... GRADE 60
- WELDED WIRE FABRIC SHALL CONFORM TO ASTM A62 AND A165.
- ALL BENDS SHALL BE MADE COLD.
- ALL REINFORCING STEEL SHALL BE SECURELY WIRED AND PROPERLY SUPPORTED ABOVE THE GROUND AND AWAY FROM FORMS.
- USE E90XX ELECTRODE WHEN WELDING GRADE 60 REBAR, E70XX FOR GRADE 40. SUCH WELDING SHALL BE PERMITTED ONLY WHERE SPECIFICALLY DESIGNATED ON THESE PLANS OR BY THE ENGINEER.
- PROVIDE AROUND OPENINGS IN WALLS AND SLABS NO. 5X4'-0" DIAGONAL AT ALL CORNERS. (2) NO. 5 AT EACH SIDE, TOP AND BOTTOM.
- PROVIDE CORNER BARS THE SAME SIZE AND SPACING AS THE HORIZ. REINF. AT THE CORNERS AND INTERSECTION OF ALL WALLS, BEAMS AND FOOTINGS.

EARTHWORK NOTES

(SOILS REPORT PROVIDED BY GEO-TEST #1-80109 DATED 1/23/98)

- THE GEOTECHNICAL ENGINEER SHALL ACT AS THE OWNER'S REPRESENTATIVE AND SHALL MAKE OBSERVATIONS AND TESTS AS CONSIDERED NECESSARY FOR QUALITY CONTROL. WHERE FOUNDATIONS OR OTHER CRITICAL ELEMENTS ARE TO BE SUPPORTED ON ENGINEERED FILL, CONTINUOUS OBSERVATIONS AND TESTS OF GRADING OPERATIONS SHALL BE MADE BY THE GEOTECHNICAL ENGINEER. ALL TESTS SHALL BE PERFORMED IN ACCORDANCE WITH PROCEDURES SET FORTH IN THE CURRENT BOOK OF STANDARDS OF THE AMERICAN SOCIETY OF TESTING AND MATERIALS (ASTM). THE CONTRACTOR SHALL PAY FOR ALL SUCH TESTING AND OBSERVATION.
- ALL SUBGRADE PREPARATIONS MUST FOLLOW SOILS REPORT PRIOR TO CONSTRUCTION.
- FILL OR BACKFILL, CONSISTING OF SOIL APPROVED BY THE GEOTECHNICAL ENGINEER, SHALL BE PLACED IN CONTROLLED COMPACTED LAYERS WITH APPROVED COMPACTION EQUIPMENT. ALL COMPACTION SHALL BE TO A MINIMUM OF 95 PERCENT OF THE MAXIMUM DRY DENSITY DETERMINED IN ACCORDANCE WITH ASTM D-1557 TEST METHOD. SOILS MOISTURE CONTENT DURING COMPACTION SHALL BE AT OPTIMUM MOISTURE CONTENT PLUS OR MINUS 2 PERCENT.
- TESTS FOR DEGREE OF COMPACTION SHALL BE DETERMINED BY THE ASTM D-1556 OR ASTM D-2922 TEST METHODS. OBSERVATION AND FIELD TESTS SHALL BE CARRIED ON DURING FILL AND BACKFILL PLACEMENT BY THE GEOTECHNICAL ENGINEER TO ASSIST THE CONTRACTOR IN OBTAINING THE REQUIRED DEGREE OF COMPACTION. IF LESS THAN 95 PERCENT IS INDICATED, ADDITIONAL COMPACTION EFFORT SHALL BE MADE WITH ADJUSTMENT OF THE MOISTURE CONTENT AS NECESSARY UNTIL 95 PERCENT COMPACTION IS OBTAINED.
- WHEREVER, IN THE OPINION OF THE GEOTECHNICAL ENGINEER, AN UNSTABLE CONDITION IS BEING CREATED, EITHER BY CUTTING OR FILLING, THE WORK SHALL NOT PROCEED IN THAT AREA UNTIL AN INVESTIGATION HAS BEEN MADE AND THE GRADING PLAN REVISED IF FOUND NECESSARY.
- PRECAUTIONS SHALL BE TAKEN DURING AND AFTER CONSTRUCTION TO MINIMIZE SATURATION OF THE FOUNDATION SOILS. POSITIVE DRAINAGE SHALL BE ESTABLISHED AWAY FROM THE EXTERIOR WALLS OF THE STRUCTURE. ALL UTILITY TRENCHES LEADING INTO THE BUILDING SHALL BE BACKFILLED WITH COMPACTED FILL. SPECIAL CARE SHALL BE TAKEN DURING INSTALLATION OF WATERLINES TO REDUCE THE POSSIBILITY OF FUTURE SUBSURFACE SATURATION.

MASONRY

- CONCRETE MASONRY UNITS SHALL BE HOLLOW, SUITABLE FOR BEARING WALL CONSTRUCTION. ALL BLOCKS SHALL CONFORM TO GRADE N UNITS GIVEN IN ASTM C90 LATEST EDITION. AND IN ADDITION SHALL HAVE A LINEAR SHRINKAGE OF .065% MAXIMUM FROM SATURATED TO THE OVEN DRY CONDITION. MASONRY UNITS SHALL HAVE CURED FOR NOT LESS THAN (28) DAYS WHEN PLACED IN THE STRUCTURE. PROVIDE ALL BOND BEAM UNITS, LINTELS, ETC., AS REQUIRED.
- DO NOT USE CHIPPED OR CRACKED BLOCKS. IF ANY SUCH BLOCKS ARE DISCOVERED IN ANY FINISHING WALL. THEY SHALL BE PROMPTLY REMOVED AND REPLACED WITH NEW BLOCKS TO THE APPROVAL OF THE ENGINEER.
- MORTAR SHALL CONFORM TO ASTM C270, TYPE S WITH A COMPRESSIVE STRENGTH OF 1,800 PSI AT 28 DAYS UNLESS OTHERWISE NOTED EXCEPT THAT TYPE M WITH COMPRESSIVE STENGTH OF 2,500 PSI AT 28 DAYS SHALL BE USED WHERE MASONRY IS BELOW GRADE OR IN CONTACT WITH WITH EARTH. THE MIX SHALL BE REVIEWED BY THE ENGINEER WHEN SPCIAL INSPECTION IS REQUIRED.
- THE USE OF ADMIXTURES SHALL NOT BE PERMITTED IN MORTAR OR GROUT UNLESS SUSTAINING DATA HAS BEEN SUBMITTED TO AND REVIEWED BY THE ENGINEER. THE USE OF ADMIXTURES IN MORTAR SHALL NOT BE PERMITTED WITHOUT REDUCING THE LIME CONTENT. THE USE OF UNCONTROLLED FINE CLAY, DIRT AND OTHER DELETERIOUS MATERIALS IS PROHIBITED.

MASONRY (CONT'D)

- AGGREGATES, SANDS FOR MORTAR SHALL CONFORM TO ASTM C144 EXCEPT THAT NOT LESS THAN 3% OF THE SAND SHALL PASS THE NUMBER 100 SIEVE. SAND AND PEA GRAVEL FOR GROUT SHALL CONFORM TO ASTM C404, TABLE 1. COURSE AGGREGATE, EXCEPT WHEN OTHRE GRADINGS ARE SPECIFICALLY APPROVED BY THE ENGINEER.
- QUICKLIME SHALL CONFORM TO ASTM C5.
- MASONRY REBAR LAP LENGTHS SHALL BE (48) DIAMETERS UNLESS NOTED OTHERWISE ON THESE PLANS.
- FOR PROPER MIXING PLACE THE SAND, CEMENT AND WATER IN THE MIXER IN THAT ORDER FOR EACH BATCH OF MORTAR OR GROUT AND MIX FOR A PERIOD OF AT LEAST (2) MINUTES. ADD THE LIME AND CONTINUE MIXING FOR AS LONG AS NEEDED TO SECURE A UNIFORM MASS BUT NOT IN NO CASE LESS THAN (10) MINUTES. USE USE MIXERS TO SECURE A UNIFORM CAPACITY. BATCHES REQUIRING FRACTIONAL SACKS WILL NOT BE PERMITTED UNLESS CEMENT IS WEIGHED FOR EACH SUCH BATCH. RETEMPER MORTAR ONLY BY ADDING WATER INTO A BATCH MADE WITH THE MORTAR AND THEN CAREFULLY WORKING THE WATER INTO THE MORTAR. RETEMPERING THE MORTAR BY DASHING WATER OVER THE MORTAR SHALL NOT BE PERMITTED. ANY MORTAR OR GROUT WHICH IS UNUSED WITHIN (1) HOUR OF THE INITIAL MIXING SHALL BE REMOVED FROM THE WORK. MORTAR SHALL BE MIXED AND MAINTAINED ON THE BOARDS TO A SLUMP OF (2-5/4") TO PLUS OR MINUS (1/4") USING A TRUNCATED CONE (4") BY (2"). (6) INCHES HIGH.
- CEMENT SHALL BE PORTLAND CEMENT CONFORMING TO ASTM C130, TYPE I OR TYPE II AND SHOULD BE ENTIRELY OF ONE MANUFACTURER.
- WATER USED FOR MORTAR AND GROUT SHALL BE CLEAN AND FREE FROM DELETERIOUS AMOUNTS OF ACID, SALTS, ALKALI AND ORGANIC MATERIALS.
- WHEN GROUTING IS STOPPED FOR A PERIOD OF (1) HOUR OR LONGER, FORM HORIZONTAL CONSTRUCTION JOINTS BY STOPPING THE GROUT POUR (1-1/2") MINIMUM BELOW THE UPPER MOST UNIT. CONSTRUCTION JOINTS OR CONTROL JOINTS SHALL BE LOCATED AT (30') ON-CENTERS UNLESS NOTED OTHERWISE ON PLANS.
- ALL MASONRY SHALL BE BUILT TO PRESERVE THE UNOBSTRUCTED VERTICAL CONTINUITY OF THE CELLS TO BE FILLED. THE VERTICAL ALIGNMENT SHALL BE SUFFICIENT TO MAINTAIN A CLEAR, UNOBSTRUCTED VERTICAL FLUE MEASURING NOT LESS THAN (3) INCHES, EXCEPT WHERE OPEN END UNITS ARE USED.
- BOND BEAM HORIZONTAL REINFORCEMENT SHALL BE SOLIDLY ENCASED IN GROUT. WIRE MESH SHALL BE USED IN EACH CELL BELOW EACH BOND BEAM TO PREVENT THE FLOW OF GROUT INTO UNGROUTED CELLS.
- IN PLACE MORTAR IN HORIZONTAL JOINTS, COMPLETELY COVER THE FACE SHELLS OF THE UNITS WITH MORTAR. SOLIDLY FILL ALL HEAD JOINTS. LAY ALL MASONRY WITH COMMON OR RUNNING BOND. HOLD RAKING TO A MINIMUM.
- REMOVE CONCRETE SCUM AND GROUT STAINS ON THE WALL IMMEDIATELY. AFTER THE WALL IS CONSTRUCTED, DO NOT SATURATE WITH WATER FOR CURING OR ANY OTHER PURPOSE. CHECK ALL JOINTS FOR TIGHTNESS AND, WHERE CRACKS ARE VISIBLE, CHIP OUT THE MORTAR, TUCK POINT AND TOOL TO MATCH ADJACENT JOINTING.
- GROUT FILL FOR CELLS SHALL CONSIST OF ONE PART PORTLAND CEMENT TO NOT MORE THAN (3) PARTS SAND, TO (2) PARTS PEA GRAVEL. (3/8") MAX. SIZE COURSE AGGREGATE. GROUT FILL USING COURSER AGGREGATE MAY BE USED IF THE MIX IS PROPERLY DESIGNED AND APPROVED BY THE ENGINEER. THE MAXIMUM SIZE OF AGGREGATE USED SHALL NOT EXCEED (1/3) THE LEAST LATERAL DIMENSION OF THE CELL TO BE FILLED. GROUT SHALL DEVELOP A MINIMUM COMPRESSIVE STRENGTH OF 2000 PSI AT (28) DAYS.
- GROUT ALL CELLS CONTAINING VERTICAL REINFORCEMENT, ANCHOR BOLTS OR EMBEDDED ITEMS. PROVIDE (2") MINIMUM COVER TO EMBEDDED ITEMS.
- ALL VERTICAL WALL REINFOREMENT SHALL HAVE DOWELS EQUAL IN SIZE EMBEDDED INTO FOOTING UNLESS NOTED OTHERWISE IN THESE PLANS.
- ASSUMED COMPRESSIVE STRENGTH F'm SHALL BE 1500 PSI UNLESS OTHERWISE NOTED ON THESE PLANS. ULTIMATE COMPRESSIVE STRENGTH BASED ON THE AVERAGE OF (3) UNITS SHALL BE NOT LESS THAN 2000 PSI.
- SPECIAL INSPECTION SHALL NOT BE REQUIRED UNLESS SPECIFICALLY NOTED ON THESE PLANS.
- MASONRY LINTELS SHALL BE SOLID GROUTED FOR THE REQUIRED DEPTH. HORIZONTAL REINFORCING SHALL EXTEND (24") BEYOND THE OPENING ON EACH SIDE.
- MAXIMUM HEIGHT OF ANY GROUT POUR SHALL NOT BE GREATER THAN (4') UNLESS PROPER HIGH-LIFT PROCEDURES ARE USED.
- VENEER ANCHORAGE TIES SHALL BE CORROSION RESISTANT 9 GAGE WIRE ON 22 GAGE X 1" WIDE CORRUGATED SHEET METAL SPACED AT (16") ON-CENTERS EACH DIR. ATTACH TO WD STUDS W/16d RING SHANK NAIL AT EA. ANCHOR.
- REINFORCING COVER SHALL BE (2") MINIMUM THROUGHOUT. POSITIONING DEVICES SHALL BE USED TO INSURE THE CORRECT PLACEMENT OF THE REINFORCEMENT AT 1 & 2 DIAMETERS MAXIMUM.

STEEL

- STRUCTURAL STEEL SHALL BE SHOP FABRICATED IN ACCORDANCE WITH AISC "CODE OF STANDARD PRACTICE FOR STEEL BUILDINGS AND BRIDGES" LATEST EDITION, WELDING SHALL COMPLY WITH AWS 1.1 "STRUCTURAL STEEL WELDING.
- CONTRACTOR TO VERIFY ALL MEASUREMENTS AT JOB SITE.
- PROVIDE ALL LUGS, CLIPS, ANGLES AND MISCELLANEOUS FASTENERS NECESSARY FOR THE COMPLETE ASSEMBLY AND INSTALLATION.
- FOR STEEL OPEN WEB JOISTS PROVIDE 1" X 1" X 1/8" CONT. HORIZONTAL BRIDGING. WELD CONT. BRIDGING TO TOP AND BOTTOM CHORDS OF ALL JOISTS.
- CAMBER ALL STEEL JOISTS PER THE STEEL JOIST INSTITUTES RECOMMENDATIONS.
- DO ALL GROUTING OF BASE PLATES AND SIMILAR ITEMS WITH NON-SHRINK GROUT.
- PROTECT ALL DISSIMILAR METALS FROM GALVANIC CORROSION.
- PROVIDE WASHERS ON ALL HEADS AND NUTS BEARING ON WOOD. DRAW ALL NUTS TIGHT AND UPSET THREADS OF PERMANENT CONNECTIONS TO PREVENT LOOSENING. USE BEVELED WASHERS WHERE BEARING IS ON SLOPED SURFACES.
- THOROUGHLY CLEAN ALL MILL SCALE, RUST, DIRT, GREASE AND OTHER FOREIGN MATTER FROM FERROUS METAL PRIOR TO PAINTING.
- AFTER MATERIAL HAS BEEN PROPERLY CLEANED AND TREATED, APPLY PRIME COAT OF PAINT TO ALL SURFACES EXCEPT THOSE ENCASED IN CONCRETE OR MASONRY. APPLY ALL PAINT AS PER MANUFACTURER'S DIRECTIONS. SPOT PAINT ALL ABRASIONS AND FIELD CONNECTIONS AFTER ASSEMBLY. SHOP COAT SHALL BE DRY PRIOR TO SHIPMENT TO JOB SITE.
- STANDARD STRUCTURAL STEEL SHAPES, BARS AND PLATES SHALL BE ASTM A36 UNLESS NOTED OTHERWISE.
- BOLTS SHALL CONFORM TO ASTM 307, GRADE A UNLESS OTHERWISE NOTED.
- SQUARE OR RECTANGULAR TUBING SHALL CONFORM TO ASTM A500 (COLD ROLLED), GRADE B OR C UNLESS OTHERWISE NOTED.
- POWDER DRIVEN FASTENERS SHALL BE RAMSET .17 INCH DIAMETER UNLESS NOTED OTHERWISE ON THE PLANS. FASTENER SHALL BE OF SUFFICIENT LENGTH SO THAT ENTIRE POINTED END PIERCES THE STEEL INSTALLATION SHALL CONFORM TO THE REQUIREMENTS OF "ICBO" REPORT #1694.
- WELDING FOR STRUCTURAL STEEL SHALL BE IN ACCORDANCE WITH AWS CODE P1.1. WELDS SHALL BE MADE ONLY BY OPERATORS EXPERIENCED IN PERFORMING THE TYPE OF WORK INDICATED. WELDS NORMALLY EXPOSED TO VIEW IN THE FINISHED WORK SHALL BE UNIFORMLY MADE AND GROUND SMOOTH. WHERE WELDING IS DONE IN PROXIMITY TO GLASS OR FINISHED SURFACES, SUCH SURFACES SHALL BE PROTECTED FROM DAMAGE DUE TO WELD SPARKS, SPATTER OR TRAMP METAL.
- INDIVIDUAL WELDERS FOR STRUCTURAL METAL WORK SHALL BE QUALIFIED FOR THE WELDS BEING PERFORMED IN ACCORDANCE WITH UBC STANDARD 27-6.
- WELDING ELECTRODES TO BE E70 SERIES UNLESS OTHERWISE NOTED.
- ALL STRUCTURAL MISCELLANEOUS STEEL SHALL BE FABRICATED AND ERECTED IN ACCORDANCE WITH THE A.I.S.C SPECIFICATIONS FOR THE DESIGN, FABRICATION AND ERECTION OF STRUCTURAL STEEL FOR BUILDINGS, LATEST EDITION.

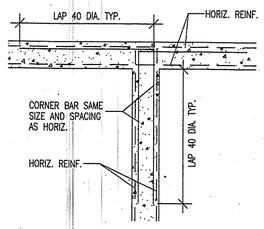

TYP. INTERSECTION AT FOOTINGS

NTS

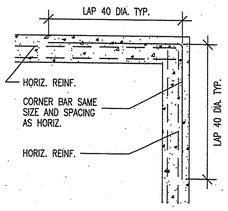

TYP. CORNER AT FOOTINGS

NTS

1 FOOTING REINFORCING DETAILS

NTS

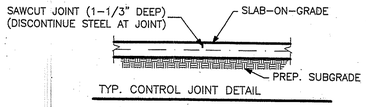

TYP. CONTROL JOINT DETAIL

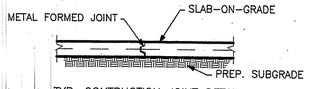

TYP. CONTRUCTION JOINT DETAIL

* MATCH WITH CONTROL JOINT LAYOUT

2 SLAB-ON-GRADE JOINT DETAILS

NTS

WAYNE G. ANDREWS A.I.A.
ARCHITECT - PLANNER
4001 Juan Tabo NE, Suite A
Albuquerque, New Mexico 87111
(505) 275-1764
Fax (505) 298-3471

POJOAQUE WELLNESS CENTER

PHASE 4

PUEBLO OF POJOAQUE NEW MEXICO

JOB NO.	
DATE:	MAY 14, 2001
DRWN BY:	CO
CHKD BY:	FJT
REVISIONS	

SHEET NO

S-4

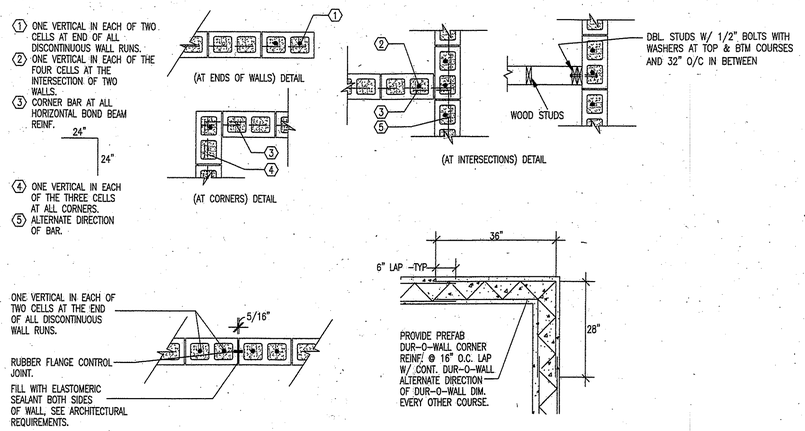

1 TYP. MASONRY WALL REINFORCING DETAILS

NTS

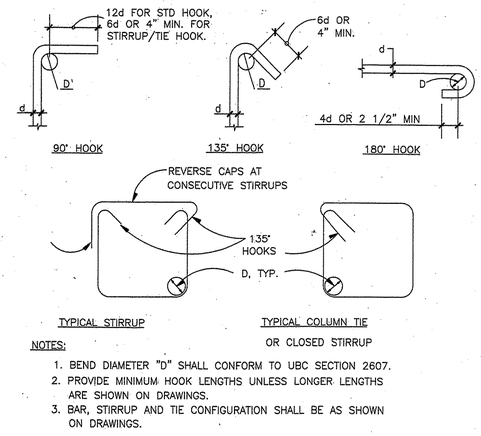

NOTES:

1. BEND DIAMETER "D" SHALL CONFORM TO UBC SECTION 2607.
2. PROVIDE MINIMUM HOOK LENGTHS UNLESS LONGER LENGTHS ARE SHOWN ON DRAWINGS.
3. BAR, STIRRUP AND TIE CONFIGURATION SHALL BE AS SHOWN ON DRAWINGS.

2 TYP. REINF. BAR HOOKS, BENDS, TIES

NTS

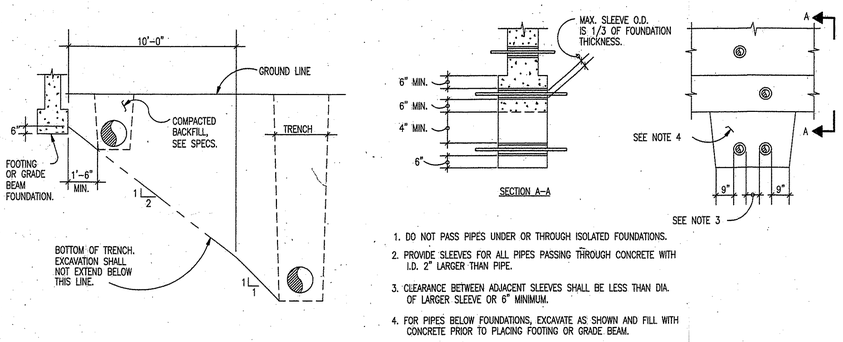

1. DO NOT PASS PIPES UNDER OR THROUGH ISOLATED FOUNDATIONS.
2. PROVIDE SLEEVES FOR ALL PIPES PASSING THROUGH CONCRETE WITH I.D. 2" LARGER THAN PIPE.
3. CLEARANCE BETWEEN ADJACENT SLEEVES SHALL BE LESS THAN DIA. OF LARGER SLEEVE OR 6" MINIMUM.
4. FOR PIPES BELOW FOUNDATIONS, EXCAVATE AS SHOWN AND FILL WITH CONCRETE PRIOR TO PLACING FOOTING OR GRADE BEAM.

PARALLEL TO FOOTINGS/GRADE BEAMS

NTS

PERPENDICULAR TO FOOTINGS/GRADE BEAMS

NTS

3 PIPE PENETRATIONS THROUGH FOOTINGS

NTS

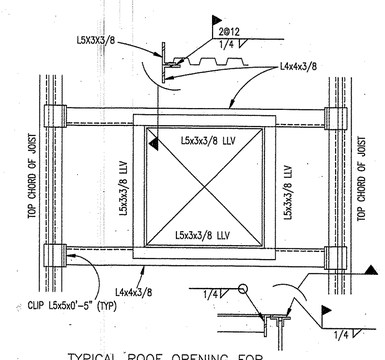

TYPICAL ROOF OPENING FOR OPENINGS LARGER THAN 2'-6" NTS

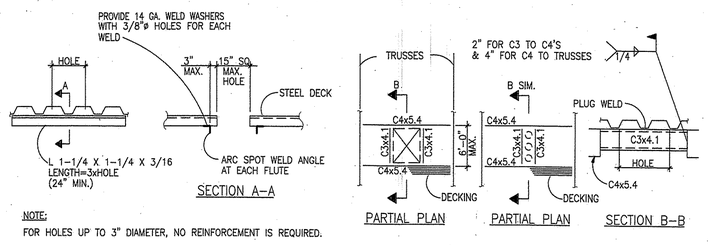

NOTE:

FOR HOLES UP TO 3" DIAMETER, NO REINFORCEMENT IS REQUIRED.

TYPICAL FOR HOLES UP TO 15" SQUARE

FOR HOLES MORE THAN 15" SQUARE (LESS THAN 2'-6")

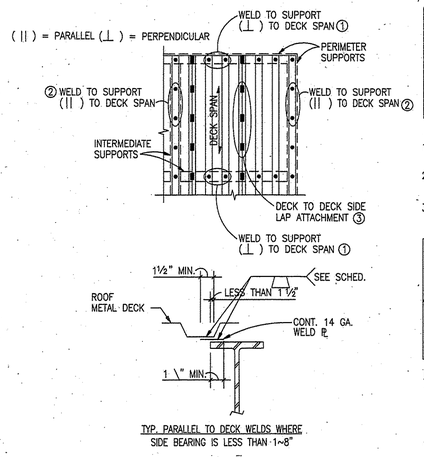

DECK TYPE	ATTACHMENT PATTERN			DIAPHRAGM SHEAR
	TO SUPPORT PERPENDICULAR TO DECK RIBS ①	TO SUPPORT PARALLEL TO DECK RIBS ②	DECK TO DECK SIDE LAPS ③	
B	5/8"PUDDLE WELD EVEY OTHER FLUTE	#10 TEK SCREWS @ 16" O.C.	(3) FASTENERS PER SPAN #10 TEK	412 LB/FT ON 4'-0" SPAN

NOTES:

1. 1. DIAPHRAGM SHEAR IS ICBO ALLOWABLE DIAPHRAGM SHEAR FOR DECK INSTALLED IN ACCORDANCE WITH CONTRACT DOCUMENTS.
2. 2. THE DETAILS SHOWN ON THIS SHEET SHALL BE INCORPORATED INTO THE PROJECT AT ALL LOCATIONS WHERE METAL DECK IS USED, WHETHER SPECIFICALLY CALLED OUT OR NOT.
3. 3. DECK SHALL BE WELDED TO ALL BEAMS AND SUPPORTS.

DECK TYPE	DEPTH (INCHES)	GAUGE	CONFIGURATION	I min. (IN^4/ FT)	Sx min (IN^3 / FT)
B	1½	20	6" 2½" 3¼" 1¾" 1½" 36"	.212	.234

NOTES:

1. SUPERIMPOSED LOAD IS MINIMUM ICBO ALLOWABLE SUPERIMPOSED LOAD FOR DECK INSTALLED AS SHOWN ON CONTRACT DOCUMENTS.

4 METAL DECK DETAILS

NO SCALE

WAYNE G. ANDREWS A.I.A.
ARCHITECT - PLANNER
4001 Juan Tabo N.E., Suite A
Albuquerque, New Mexico 87111
(505) 275-1744
Fax (505) 298-3471

POJOAQUE WELLNESS CENTER

PUEBLO OF POJOAQUE NEW MEXICO

PHASE 4

JOB NO.
DATE: MAY 14, 2001
DRWN BY: CO
CHKD BY: FJT
REVISIONS

SHEET NO
S-5

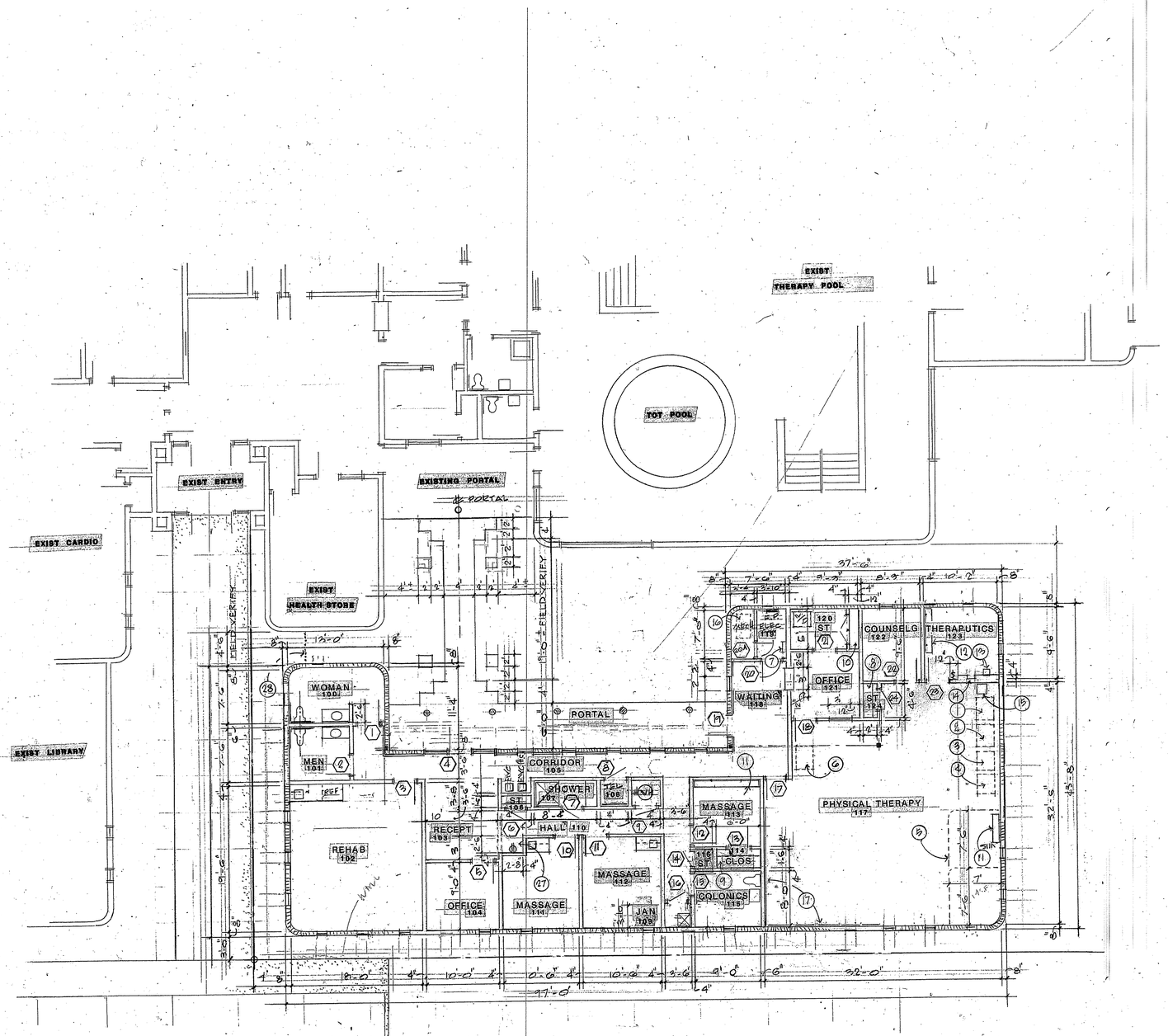

FLOOR PLAN 1/8" = 1'-0"

NORTH

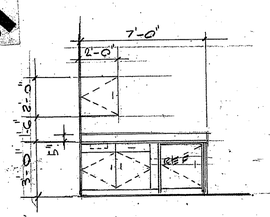

NORTH ELEV - 108

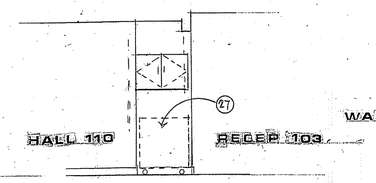

ELEV.

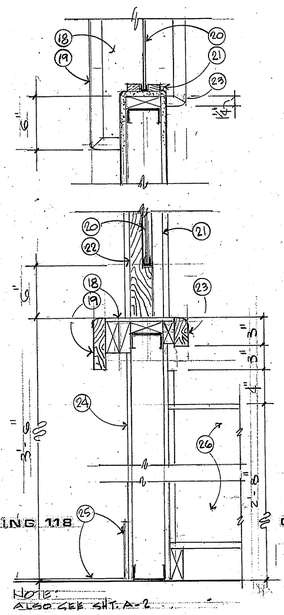

NOTE:
ALSO SEE SHT. A-2

PASS-THRU SECTION 1/2" = 1'-0"

KEYED NOTES

1. ULTRA-SOUND UNIT, BY OWNER. PROVIDE 220V OUTLET
2. STIMULATOR UNIT, BY OWNER. PROVIDE 220V OUTLET
3. HYDRO-THERAPY UNIT, BY OWNER. PROVIDE 220 OUTLET
4. COLD UNIT, BY OWNER, PROVIDE 220V OUTLET
5. CEILING MOUNTED CURTAIN TRACK (HOSPITAL PATIENT RM SIMILAR)
6. COPY MACHINE (N.I.C.)
7. LADDER TO ROOF SCUTTLE
8. IN STOR 106 AND STOR 124, PROVIDE 12" DEEP ADJUSTABLE SHELVES (5) W/ STANDARDS. SHELVES TO HAVE MELALINE FINISH
9. IN CLOS 114, NOTE 8 SIMILAR
10. IN STOR 120, PROVIDE 5 – 12" DEEP, FIXED SHELVING, W/ MELANINE FIN. (ST. 116 SIMILAR)
11. INDICATES ONE (1) 12" DEEP X 9' LONG ADJUSTABLE SHELF W/ MELANINE FIN. SET STANDARD 60 SHELF 15 5'-0" A.F.F. (12"D x 4'L @ CUBICLE)
12. INDICATES ONE (1) 12" DEEP x 6' LONG ADJ. SHELF. NOTE 11 ABOVE APPLIES
13. FLOOR SINK. – SEE PLUMB'G DRGS
14. 12" x 12" WALL RECESS FOR HOT AND COLD WATER FAUCETS
15. HAND SINK
16. BOOSTER PUMP – SEE PLUMB. DWGS.
17. WALL MIRRORS – SEE ELEV. ON SHEET A-2
18. LAMINATED PLASTIC TOP
19. 5/4" x 6" OAK TRIM W/BULLNOSED CORNERS.
20. ¼ CLEAR SAFETY GLASS W/ALUM. CHANNELS ON EXPOSED EDGES, TOP & BOTTOM
21. ¾" x 1 ½" OAK STOP
22. ¾" x 1 ½" OAK STOP ABOVE 6", ¾" x 2", BELOW 6" TO PROVIDE SAFETY GLASS SUPPORT
23. 5/4" x 3" OAK TRIM W/ BULL-NOSE CORNERS
24. GYP BOARD
25. FLOORING AND BASE, SEE RM. FIN. SCHEDULE
26. MILLWORK BELOW PASS-THRU WINDOW. SEE SHT. A-2
27. COPY MACHINE "ALCOVE"
28. ~~6' HIGH COYOTE FENCE~~

WAYNE G. ANDREWS A.I.A.
ARCHITECT – PLANNER
4001 Juan Tabo N.E., Suite A
Albuquerque, New Mexico 87111
(505) 275-1764
Fax (505) 298-3471

POJOAQUE WELLNESS CENTER

PUEBLO OF POJOAQUE NEW MEXICO

PHASE 4

STATE OF NEW MEXICO
WAYNE G. ANDREWS
493
REGISTERED ARCHITECT

JOB NO.	
DATE	MAR. 7, 2003
DRWN BY	
CHKD BY	
REVISIONS	

SHEET NO
A-1

ROOM FINISH SCHEDULE

ROOM NO	ROOM NAME	FLR	BSE	WALLS N	WALLS S	WALLS E	WALLS W	CLG	CLG HGT	REMARKS
100	WOMEN	F-3	B-4	W-3 W-2	W-3 W-2	W-3 W-2	W-1 W-2	C-2	8'-6"	
101	MEN	F-3	B-4	W-3 W-2	W-1 W-2	W-1 W-2	W-1 W-2	C-2	8'-6"	
102	REHAB	F-1	B-1	W-3	W-1	W-1	W-3	C-1	9'-6"	
103	RECEPT.	F-2	B-2	W-1	W-1	W-1	W-1	C-1	9'-0	
104	OFFICE	F-2	B-2	W-1	W-1	W-1	W-3	C-1	9'-6	
105	CORRIDOR	F-4	B-3	W-1	W-1	W-3	W-1	C-1	9'-0"	SEE SHT. A-2 FOR CERAMIC TILE PATTERN
106	STOR	F-5	B-1	W-1	W-1	W-1	W-1	C-2	8'-6	
107	SHOWER	F-3	B-4	W-1 —	W-1 W-2	W-1 W-2	W-1 W-2	C-2	8'-6	
108	ELEC.	F-3	B-1	W-1	W-1	W-1	W-1	C-2	8'-6	
109	JANITOR	F-5	B-1	W-1	W-1	W-1	W-1	C-2	8'-6	
110	HALL	F-2	B-2	W-1	W-1	W-1	W-1	C-1	8'-6	
111	MASSAGE	F-1	B-1	W-1	W-1	W-1	W-3	C-1	9'-6	
112	MASSAGE	F-1	B-1	W-1	W-1	W-1	W-3	C-1	9'-6	
113	MASSAGE	F-1	B-1	W-1	W-1	W-1	W-1	C-1	8'-6"	
114	CLOSET	F-1	B-1	W-1	W-1	W-1	W-1	C-2	8'-6	
115	COLONICS	F-3	B-4	W-1	W-1	W-1	W-3	C-1	9'-6	
116	STOR	F-3	B-1	W-1	W-1	W-1	W-3	C-2	8'-6	
117	PHYS. THERAPY	F-1	B-1	W-1	W-3	W-1	W-3	C-1 C-2	10'-2 9'-6"	
118	WAITING	F-4	B-3	W-3	W-1	W-1	W-1	C-1	9'-0	
119	MECH / ELEC	F-3	B-1	W-3	W-1	W-3	W-1	C-2	9'-0	
120	STOR	F-1	B-1	W-1	W-1	W-3	W-1	C-1	8'-6"	
121	OFFICE	F-2	B-2	W-1	W-1	W-1	W-1	C-1	8'-6	
122	COUNSELG	F-2	B-2	W-1	W-1	W-3	W-1	C-1	8'-6"	
123	THERAPUTICS	F-1	B-1	W-1	W-3	W-3	W-1	C-1	8'-6	
124										
125										

NOTE: • IN ALL ROOMS WHERE PAINTED C.M.U. OCCUR ALL VERTICAL JOINTS SHALL BE FLUSH - ALL HORIZONTAL JOINTS SHALL BE STRUCK
• ALL EXPOSED GYP. BOARD CORNERS SHALL BE BULL NOSED

FINISHES

	FLOOR		BASE		WALLS		CEILINGS	
F-1	VCT	B-1	4" VINYL		W-1	GYP. BD PAINTED	C-1	GYP. ACOUST. LAY-IN TILE
F-2	CARPET	B-2	4" VINYL (CARPET)		W-2	4" C.T. VATNECOT GLO #611	C-2	GYP. BD PAINTED
F-3	12"x12" CERAMIC TILE	B-3	6" CERAM. TILE		W-3	C.M.U. PAINTED	C-3	
F-4	12"x12" CERAMIC TILE	B-4	4" CERAM. TILE		W-4		C-4	
F-5	SEALED CONCRETE				W-5			
					W-6			

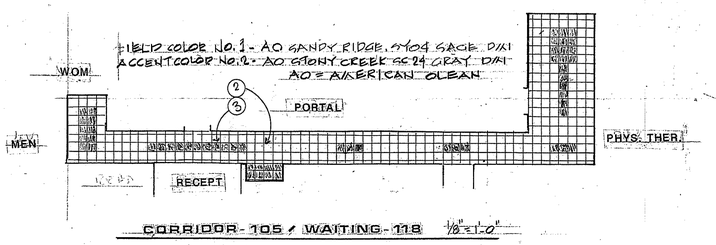

CORRIDOR - 105 / WAITING - 118 1/8" = 1'-0"

DOOR SCHEDULE

DOOR NO	SIZE	TYPE	FRAME	SILL	PANIC HARD	RATED	CLOSER	REMARKS
1	3°x7°	A	H/M	—	—	—	C	P/PP
2	3°x7°	A	H/M	—	—	—	C	P/PP
3	3°x7°	A	H/M	—	—	—	—	
4	3°x7°	B	ASF	VPT	—	—	C	
5	3°x7°	A	H/M	—	—	—	—	
6	2°x7°	A	H/M	—	—	—	—	
7	3°x7°	A	H/M	—	—	—	—	
8	3°x7°	A	H/M	—	—	—	—	
9	3°x7°	A	H/M	—	—	—	—	PROVIDE 12"x12" LOUVER OVERHEAD ONE WAY.
10	3°x7°	A	H/M	—	—	—	—	
11	3°x7°	A	H/M	—	—	—	—	
12	3°x7°	A	H/M	—	—	—	—	
13	2°x7°	A	H/M	—	—	—	—	
14	1°x7°	A	H/M	—	—	—	—	
15	3°x7°	A	H/M	—	—	—	—	
16	2°x7°	A	H/M	—	—	—	—	
17	3°x7°	A	H/M	—	—	—	—	
18	3°x7°	A	H/M	—	—	—	—	
19	3°x7°	B	ASF	VPT	PH	—	C	
20	3°x7°	A	H/M	—	—	—	—	
21	3°x7°	A	H/M	—	—	—	—	
22	3°x7°	A	H/M	—	—	—	—	
23	3°x7°	A	H/M	—	—	—	—	
24	2°x7°	A	H/M	—	—	—	—	
* 100A	2°x7°	A	H/M	—	—	—	—	

D.S. ABBREVIATIONS

AL -	ALUMINUM
GL -	GLASS (SAFETY/TEMPERED)
ASF -	ALUMINUM STORE FRONT (BRONZE FIN)
HM -	HOLLOW METAL
FP -	FLUSH PANEL
WPT -	WATER-PROOF THRESHOLD
PH -	PANIC HARDWARE
C -	CLOSER
SSK -	STAINLESS STL. KICK PLATE
P/PP -	PUSH/PULL PLATE
WST -	WEATHER STRIPPING
R -	1 HR

DOOR TYPES

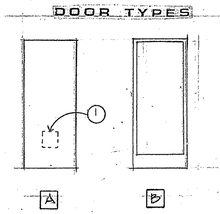

NOTE:
TYPE A DOORS SHALL BE SOLID CORE, BIRCH STAIN GRADE

ADA BATHR'M REQ'M'TS

ANSI A117.1 1998

603.3 Mirrors. Mirrors shall be mounted with the bottom edge of the reflecting surface 40 inches (1015 mm) maximum above the floor or ground.

604.4 Height. The top of water closet seats shall be 17 inches (430 mm) minimum and 19 inches (485 mm) maximum above the floor or ground. Seats shall not return automatically to a lifted position.

604.5 Grab Bars. Grab bars for water closets shall comply with Section 609. Grab bars shall be provided on the rear wall and on the side wall closest to the water closet.

604.5.1 Side Wall. Side wall grab bar shall be 42 inches (1065 mm) long minimum, 12 inches (305 mm) maximum from the rear wall and extending 54 inches (1370 mm) minimum from the rear wall.

604.5.2 Rear Wall. The rear wall grab bar shall be 24 inches (610 mm) long minimum, centered on the water closet. Where space permits, the bar shall be 36 inches (915 mm) long minimum, with the additional length provided on the transfer side of the water closet.

606.3 Height and Clearances. The front of lavatories and sinks shall be 34 inches (865 mm) maximum above the floor or ground, measured to the higher of the fixture rim or counter surface.

606.4 Faucets. Faucets shall comply with Section 309. Hand-operated, self-closing faucets shall remain open for 10 seconds minimum.

606.5 Bowl Depth. Sinks shall be 6½ inches (165 mm) deep maximum. Multiple compartment sinks shall have at least one compartment complying with this requirement.

606.6 Exposed Pipes and Surfaces. Water supply and drain pipes under lavatories and sinks shall be insulated or otherwise configured to protect against contact. There shall be no sharp or abrasive surfaces under lavatories and sinks.

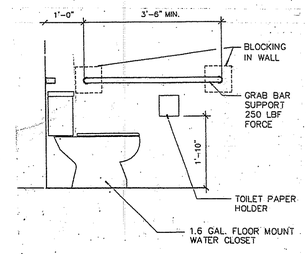

TYPICAL ADA REQUIREM'TS

KEYED NOTES

1. INDICATES A 12" x 12" LOUVER IN DOOR 14 ONLY.
2. 12" x 12" CERAMIC TILE, FIELD COLOR NO. 1
3. 12" x 12" C.T. ACCENT COLOR NO. 2
4. MIRROR
5. 5 GAL. WATER BOOTLE - BY OWNER
6. 1'-6" x 2'-0" PLYWOOD SHELF, BRACKETED, W/MELANINE FINISH. PROVIDE 5" DIAMETER HOLE
7. WATER SORCE FOR 5 GAL. BOTTLE
8. 12" DEEP x 3'-0" WIDE MELANINE ADJUSTABLE SHELVING
9. WATER VALVE. SEE PLUMB'G DWGS.
10. SAFETY GLASS PANEL. SEE DETAIL . SHT. A-1
11. 2 x 6 OAK HANDRAIL
12. INDICATES ¼" THICK, MIRROR PANELS. (SAFETY GLASS AS PER U.B.C. STOP PANELS ABOVE AND BELOW HANDRAILS:

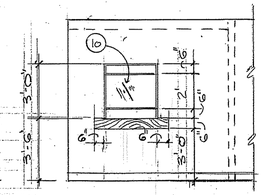

EAST ELEV - 118
ALSO SEE SHT. A-1

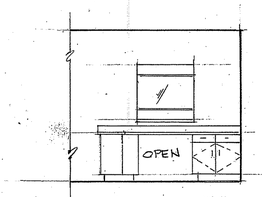

WEST ELEV 121

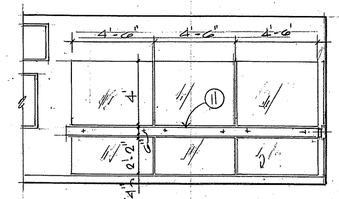

SOUTH ELEV 117

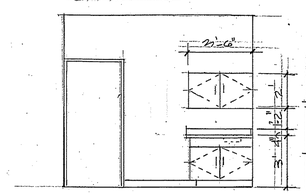

NORTH ELEV - 112

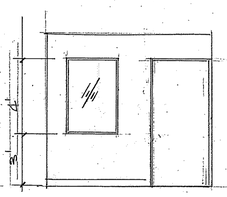

SOUTH ELEV - 121

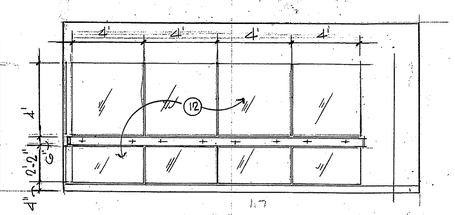

WEST ELEV 117

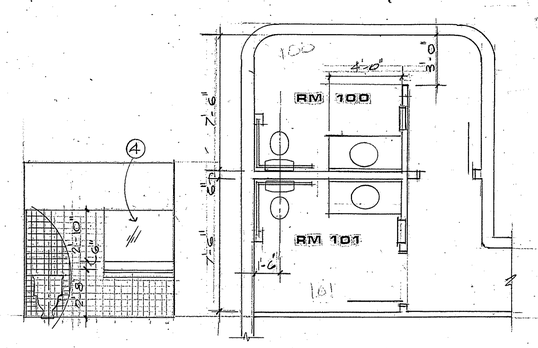

TYP. ELEV
1/4" = 1'-0"

PUBLIC TOILETS
1/4" = 1'-0"

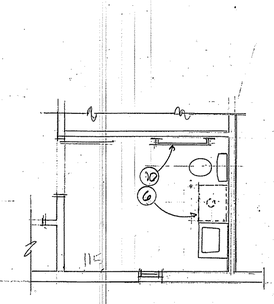

COLONICS - RM 115
1/4" = 1'-0"

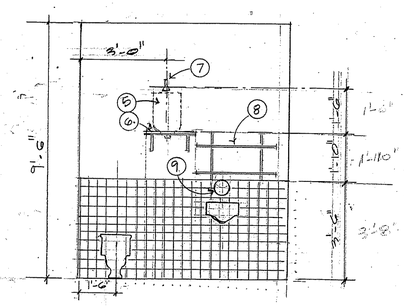

EAST ELEV. - 115
3/8" = 1'-0"

WAYNE G. ANDREWS A.I.A.
ARCHITECT - PLANNER
4051 Juan Tabo N.E., Suite A
Albuquerque, New Mexico 87111
(505) 275-1764
Fax (505) 296-3471

POJOAQUE WELLNESS CENTER

PUEBLO OF POJOAQUE NEW MEXICO

PHASE 4

STATE OF NEW MEXICO
WAYNE G. ANDREWS
ARCHITECT

JOB NO.	
DATE	MAR. 7, 2003
DRWN BY	
CHKD BY	
REVISIONS	
SHEET NO	A-2

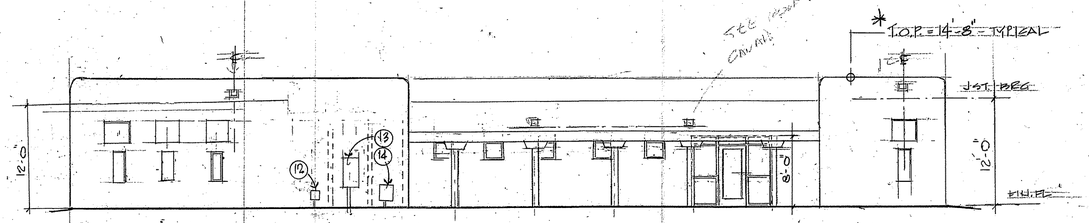

N. ELEVATION 1/8" = 1'-0"

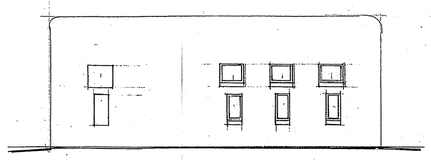

W. ELEVATION 1/8" = 1'-0"

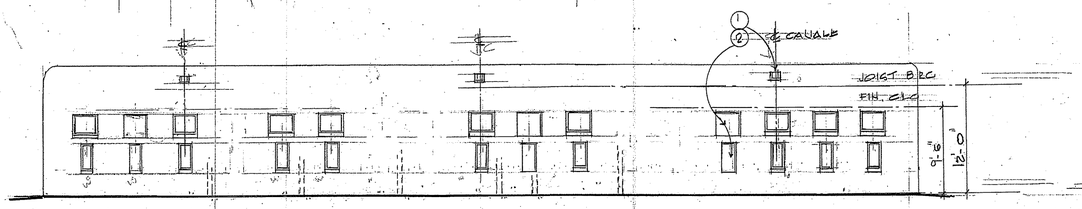

S. ELEVATION 1/8" = 1'-0"

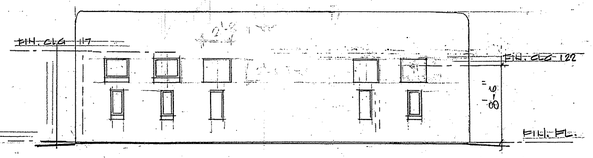

E. ELEVATION 1/8" = 1'-0"

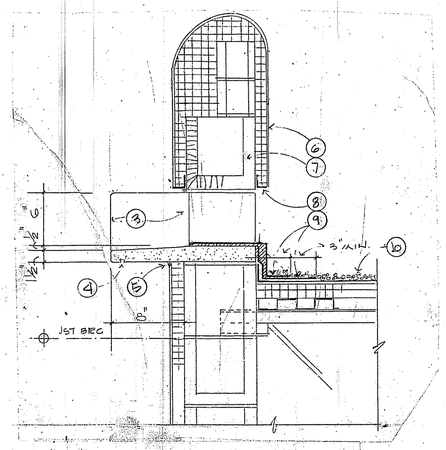

OVERFLOW CANALE IN CMU WALL 1 1/2" = 1'-0"

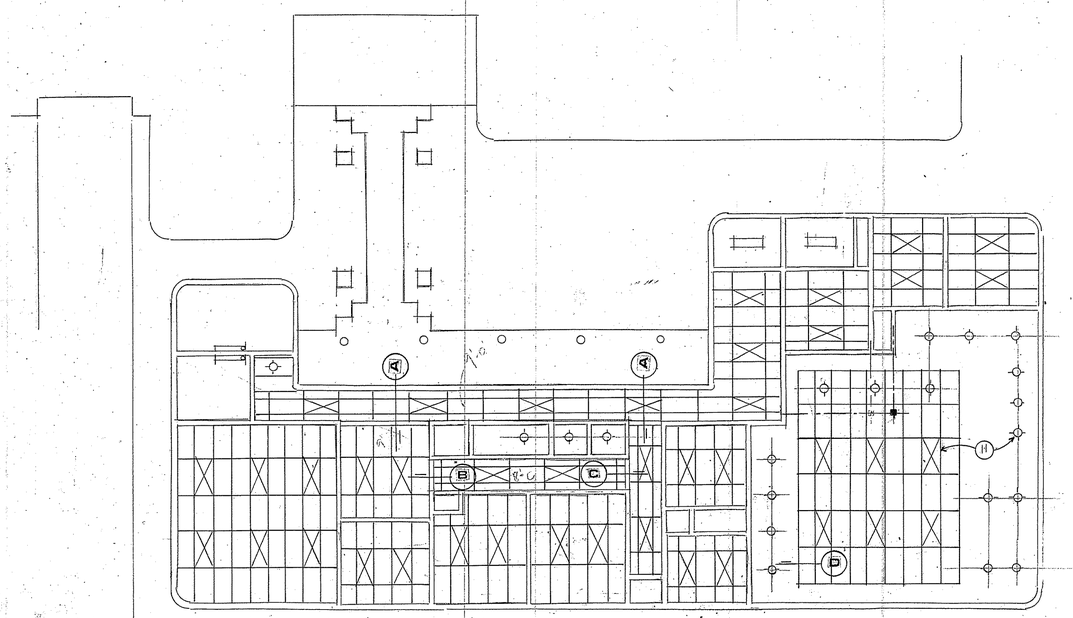

REFLECTED CEILING PLAN

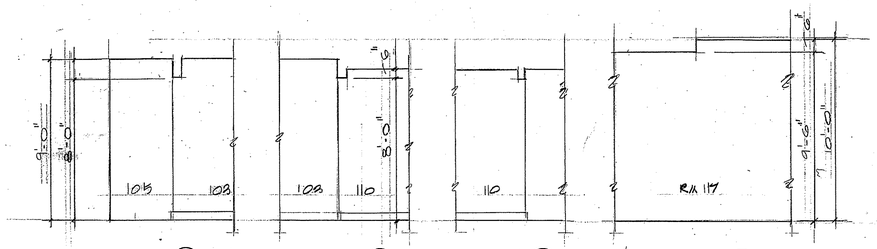

SECTION A SECTION B SECTION C SECTION D 1/4" = 1'-0"

KEYED NOTES

1. OVER-FLOW CANALE. SEE DETAIL THIS SHEET
2. RECESSES IN STUCCO FINISH
3. PRECAST CONCRETE CANALE (8X8X16).
4. DRIP
5. SEALANT, CLEAR AROUND
6. EIFS SYSTEM
7. LINTEL BLOCK AT CANALE OPENING
8. EIFS SYSTEM METAL STOP
9. UN-CURED FLASHING
10. BALLASTED EPDM ROOFING
11. VERIFY LIGHTING PATTERN (S) WITH ELEC. LIGHTING PLAN
12. GAS METER
13. ELECTRIC SWITCH GEAR
14. WATER METER

WAYNE G. ANDREWS A.I.A.
ARCHITECT - PLANNER
4001 Juan Tabo N.E. Suite A
Albuquerque, New Mexico 87111
(505) 275-1764
Fax (505) 298-3471

POJOAQUE WELLNESS CENTER

PUEBLO OF POJOAQUE NEW MEXICO

PHASE 4

STATE OF NEW MEXICO REGISTERED ARCHITECT

JOB NO.	
DATE	1/12/2003
DRWN BY	
CHKD BY	
REVISIONS	

SHEET NO. A-3

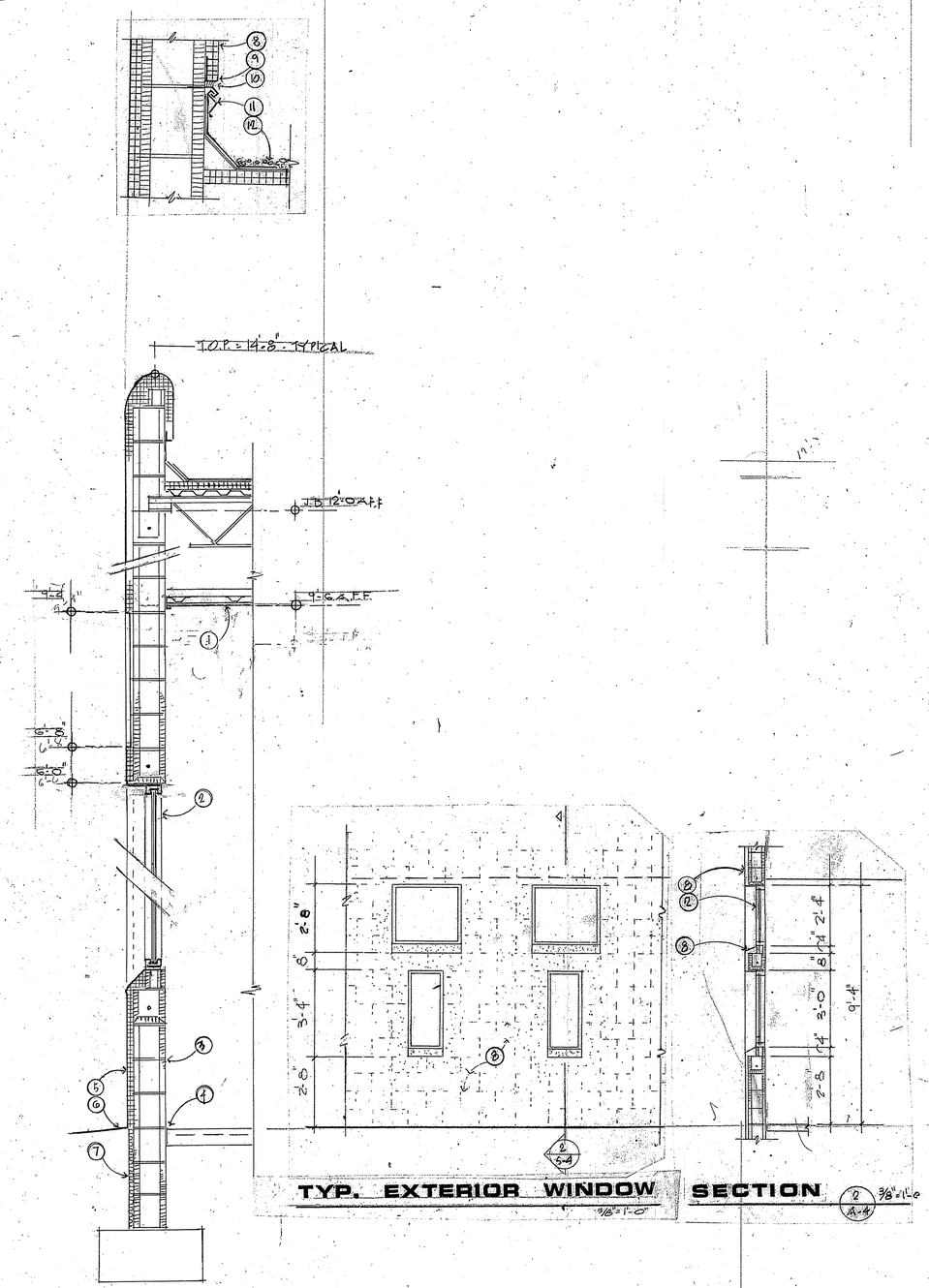

SECTION 1/A-4 3/4"=1'-0"

SECTION 2/A-4 3/8"=1'-0"

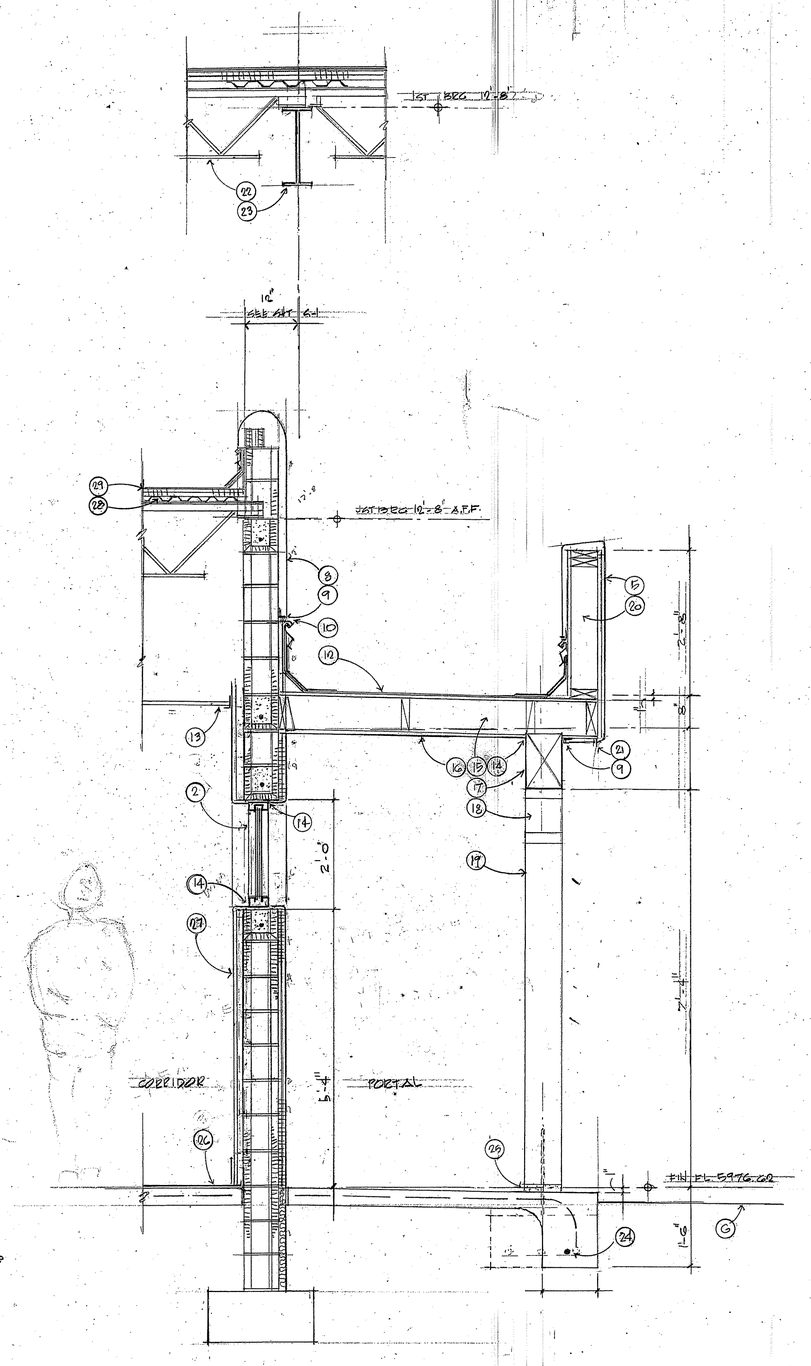

SECTION 3/A-4 3/4"=1'-0"

SECTION 4/A-4 3/4"=1'-0"

KEYED NOTES

1. ACOSTICAL LAY-IN CLG. – SEE RM. FIN. SCHEDULE
2. ALUMINUM WINDOW FRAME. FINISH COAT SHALL MATCH EXISTING FRAMES ("PEACH")
3. 8" CMU EXTERIOR WALLS. WHERE EXPOSED, PROVIDE "STRUCK" HORIZ. JOINTS ONLY. VERTICAL JOINTS SHALL BE FLUSH. SEE NOTE ON ROOM FIN. SCHEDULE
4. ½" EXP. JOINT
5. EIFS STUCCO SYSTEM ON 2 LAYER OF ¾" POLYSTYRENE FOAM BOARD, SMOOTH BOTH SIDES
6. FINISH GRADE
7. 1/2" PERIMETER INSULATION
8. SEE NOTE 5 ABOVE
9. EIFS STUCCO TOP
10. SEALANT
11. 26 GA. G.I. METAL FLASH'G REGLET
12. ROOFING SYSTEM
13. ACOUSTICAL LAY-IN CEILING
14. SEALANT
15. ROOF FRAMING – SEE SHT. S-2
16. 1 X 4 ROUGH-SAWN BOARDS
17. WOOD BM. SEE SHT. S-2 FOR SIZE
18. WOOD CORBELS – MATCH EXISTG
19. 8" DIAMETER WOOD COLUMNS
20. 2 X 6 WOOD STUDS @ 16" O.C.
21. METAL DRIP (CONTINUOUS)
22. STEEL JOISTS. SEE SHT. S-2
23. STEEL BEAM – SEE SHT. S-2
24. #4 CONT.
25. CONCRETE GROUT @ WOOD COLUMNS
26. FLORING. SEE RM. FIN. SCHEDULE
27. 5/8" GYP. BOARD ON 1 ½" FURRING CHANNELS. TYPICAL ON CMU WALL IN CORRIDOR 105
28. METAL DECKING
29. 1 ½ INSULATION

WAYNE G. ANDREWS A.I.A.
ARCHITECT – PLANNER
4001 Juan Tabo N.E., Suite A
Albuquerque, New Mexico 87111
(505) 293-7234
Fax (505) 298-3471

POJOAQUE WELLNESS CENTER

PUEBLO OF POJOAQUE NEW MEXICO

PHASE 4

STATE OF NEW MEXICO
WAYNE G. ANDREWS
REGISTERED ARCHITECT

JOB NO.	
DATE	MAR. 7, 2003
DRWN BY	
CHKD BY	
REVISIONS	

SHEET NO.
A-4

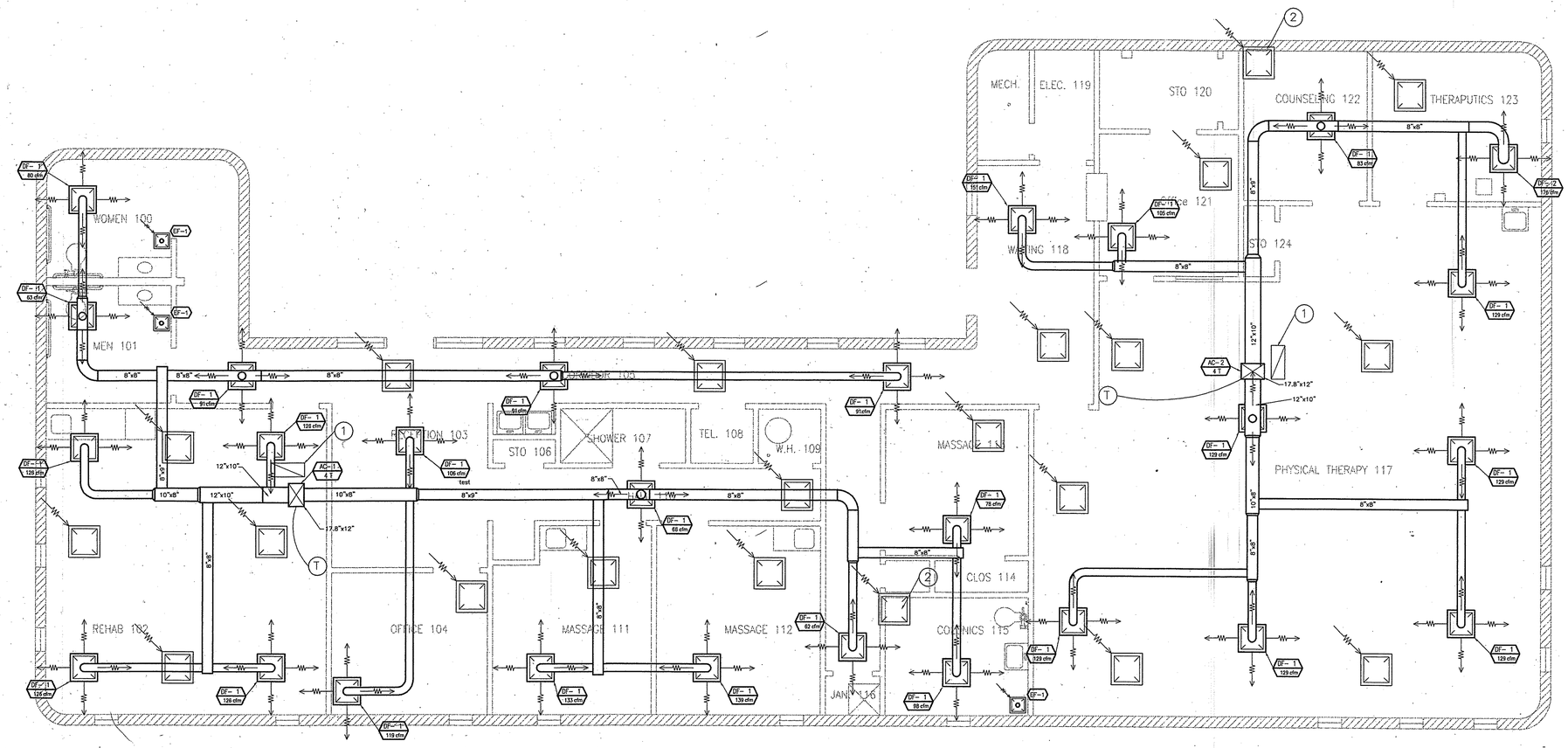

HVAC PLAN

NORTH

SCALE: 1/4"=1'-0"

KEYED NOTES:

1. Return boot to include rigid elbow, duct-liner, and 4' horizontal extension into plenum space.

2. Return grill for plenum to be field cut to fit in ceiling grid.

GENERAL NOTES:

1. A licensed and bonded plumbing contractor shall be used for installation. 1997 UPC and local plumbing codes shall be followed during installation.

2. All rectangular duct 90°, larger than 18"x18" shall have turning vanes. Square 90° angles are acceptable after first supply tee or 90°.

3. Where possible, all diffuser runouts per "Duct Take-Off" detail on Schedule sheet M-2. (No vertical connections.)

4. Contractor to verify and coordinate w/ Electrical Engineer and Contractor for wiring and power required.

5. Contractor to verify and coordinate structural support and openings in floor, roof, and walls.

6. All duct to be installed per "DUCT HANGER DETAIL" on schedule sheet M-2.

7. Acoustically line first 6' of all main supply ducts leaving units. See schedule sheet M-2 "DUCT LINER" for specification.

8. 1" of insulation shall be used on all supply trunks.

9. Provide 5% positive pressure in supply trunks/diffusers.

LEGEND

- Supply Air Diffuser
- Return Air Register (See M-2)
- Exhaust Fan
- AC-# / # t — Air Conditioner & Tonnage (See schedule sheet M-2
- DF-# / # cfm — Diffuser size & CFM (See schedule sheet M-2)
- EF-1 — Exhaust Fan Size (See schedule sheet M-2)

THE group
Telck-Hensley Engineering Group
4001 JUAN TABO NE, SUITE A
ALBUQUERQUE, NEW MEXICO 87111
Phone:(505)292-3202 FAX:(505)292-3904

WAYNE G. ANDREWS A.I.A.
ARCHITECT - PLANNER
4001 Juan Tabo NE, Suite A
Albuquerque, New Mexico 87111
(505) 275-1764
Fax (505) 298-3471

POJOAQUE WELLNESS CENTER

PUEBLO OF POJOAQUE NEW MEXICO

PHASE 4

RAYMOND HENSLEY STATE OF NEW MEXICO 7875 REGISTERED PROFESSIONAL ENGINEER
3/6/03

JOB NO.	
DATE:	MAR. 5, 2003
DRWN BY:	DRA
CHKD BY:	REH
REVISIONS	

SHEET NO

M-1

MECHANICAL EQUIPMENT SCHEDULE

PACKAGED AIR CONDITIONING UNITS

AC–1 & AC–2 Units shall be dedicated downflow. Operating range shall be 115° F and 0° F cooling as standard from the factory for all units. Cooling performance shall be rated in accordance with ARI testing procedures. All units shall be factory assembled, internally wired, and fully charged with R–22 before leaving the factory. Units shall be UL listed and labeled, classified in accordance to ANSIZ2.47 for gas fired central furnaces and UL465 for central cooling air conditioners. Units shall be Carrier or equivalent. All units shall be equipped with economizers' outside air dampers, weather hoods, and built–in barometric relief dampers. Furnish continuous pre manufactured curbs w/ flashing. Units shall be fitted with a factory installed convenience outlet.

SYMBOL	MODEL	WEIGHT	HEATING CAPACITY	COOLING CAPACITY	GAS SERVICE	HEATING INPUT	CFM	ESP (IN.)	FAN H.P.	VOLTAGE	MCA/ MOCP	PERCENTAGE O.A.
AC–1	CARRIER 48HGE005	689	89,000	45,876	.50"	115,000	1831	0.4"	.92	208/3ø	28.5/35	35.12% 643cfm
AC–2	CARRIER 48HGE005	730	57,100	39,410	.50"	72,000	1400	0.3"	.96	208/3ø	28.5/35	40.79% 571 cfm

THERMOSTATS

T–1 Thermostat and subbase – Provide heating and cooling unit control as required by equipment manufacturer. The subbase shall provide system and fan switching at the thermostat location. Thermostat shall have seven day programming for control of occupied and unoccupied modes. Provide metal locking cover. Coordinate cover and locks with architect. Thermostat shall also have keypad lock function.

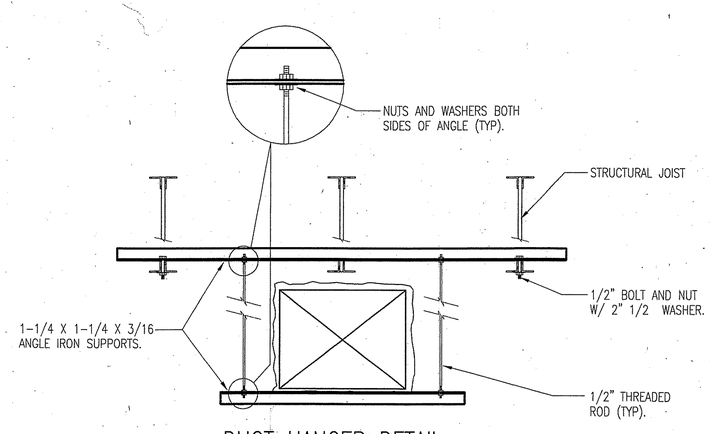

DUCT HANGER DETAIL

N.T.S.

EXHAUST FANS

EF–1 75 cfm , 1/100 H.P. GREENHECK G060–E

DIFFUSERS, GRILLES AND REGISTERS

Krueger 1400 Series ceiling diffusers in the sizes and styles specified w/ integral damper. Diffusers shall be suitable for installation in T–bar Lay–in and flush surface ceilings. Plenums and necks shall be constructed of aluminum in square or rectangular sizes. Standard finish shall be British White.

Ceiling diffusers shall be tested in accordance with Air Diffusion Council (ADC) code 1062R4. Sound data for diffusers shall be calculated in accordance with International Standard ISO 3741 for comparison.

Contractor shall verify the ceiling type and substitute appropriate diffuser.

NOTE: DF–# DIFFUSERS ARE KRUEGER SERIES 1400, PAINTED BRITISH WHITE W/O.B.D.

NOTE: ALL RETURN AIR GRILLS ARE KRUEGER EG5 SERIES, PAINTED BRITISH WHITE, W/1/2"x1/2" GRID CELLS.

DUCT LINER

Rectangular duct liners should be secured by mechanical fasteners and installed in accordance with HVAC Duct Construction Standard – Metal and Flexible (SMACNA 1995), Adhesives should be Type I, in conformance to ASTM Standard C916, and should be applied to the duct, with at least 90% coverage of mating surfaces.

DIFFUSERS

SYMBOL	NOMINAL NECK SIZE
DF–1	6"ø
DF–2	8"ø

TAKE–OFF SIZE SCHEDULE:

SIZE (ROUND)	TAKE–OFF SIZE
6"ø	43 SQ. IN. MIN.
7"ø	58 SQ. IN. MIN.
8"ø	76 SQ. IN. MIN.
9"ø	95 SQ. IN. MIN.
10"ø	118 SQ. IN. MIN.
12"ø	170 SQ. IN. MIN.
14"ø	230 SQ. IN. MIN.

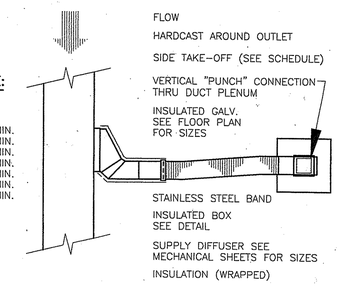

DUCT TAKE–OFF DETAIL

N.T.S.

THE group
Telck–Hensley Engineering Group
4001 JUAN TABO NE, SUITE A
ALBUQUERQUE, NEW MEXICO 87111
Phone:(505)292–3202 FAX:(505)292–3904

WAYNE G. ANDREWS A.I.A.
ARCHITECT – PLANNER
4001 Juan Tabo NE, Suite A
Albuquerque, New Mexico 87111
(505) 275-1764
Fax (505) 296-3471

POJOAQUE WELLNESS CENTER
PHASE 4
PUEBLO OF POJOAQUE NEW MEXICO

RAYMOND HENSLEY STATE OF NEW MEXICO 7873 REGISTERED PROFESSIONAL ENGINEER
3/6/03

JOB NO. 03–018
DATE: MAR. 5, 2003
DRWN BY: DRA
CHKD BY: REH
REVISIONS

SHEET NO
M-2

J:\2003 Jobs\03-018 Pojoaque Wellness Phase 4\Mechanical\M-2.dwg, 03/06/2003 06:37:33 PM

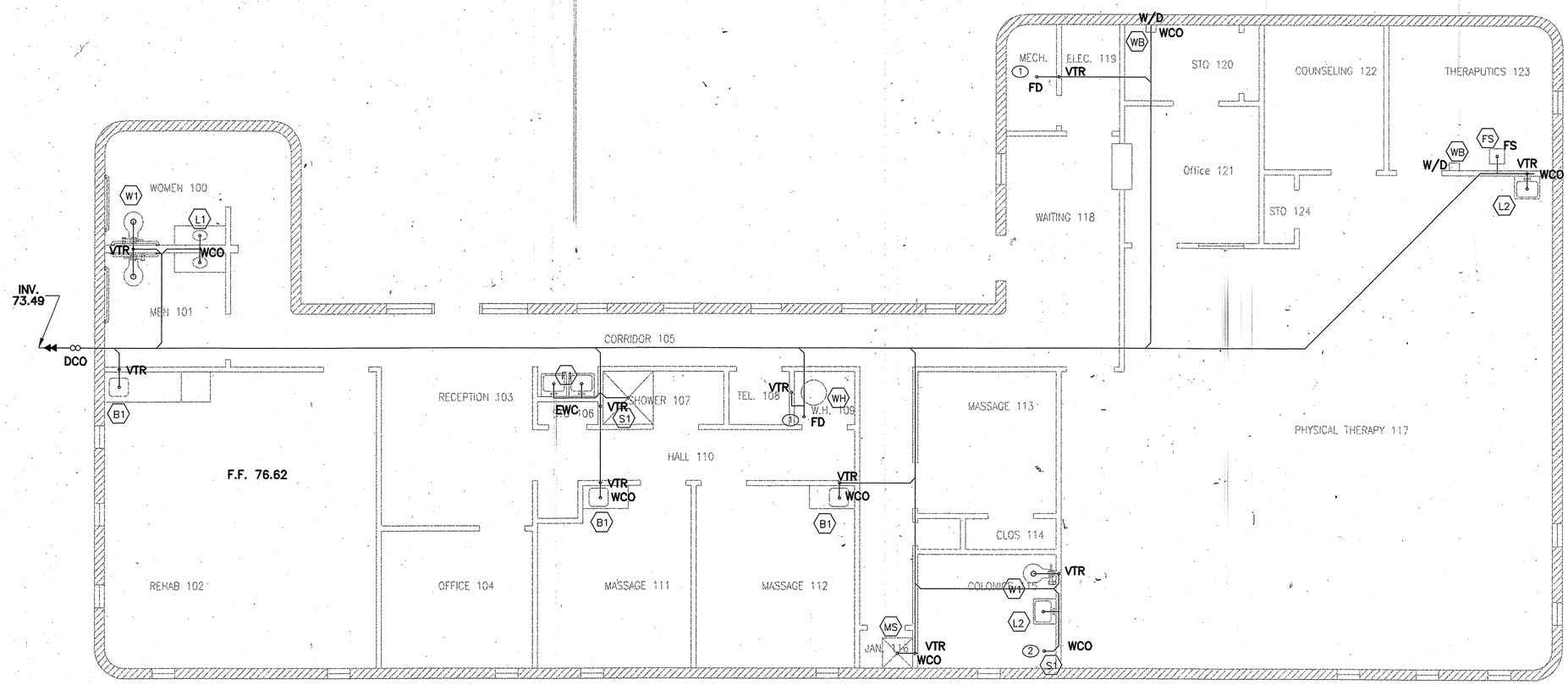

PLUMBING SEWER PLAN

NORTH

SCALE: 1/4"=1'-0"

KEYED NOTES:

1. Trap primer valve. See detail on Sheet P-3.
2. Colonic sewer connection. See detail on Sheet P-3.

GENERAL NOTES:

1. SEE RISER DETAILS FOR DETAILED SEWER PIPE SIZING
2. COORDINATE EXACT LOCATION OF ROOF PENETRATIONS WITH ROOF STRUCTURE LOCATIONS
3. COORDINATE EXACT LOCATION OF T-STAT WITH ARCHITECT
4. COORDINATE ALL PLUMBING, PIPING, DUCTWORK WITH OTHER EQUIPMENT
5. INSTALL ALL MATERIALS IN ACCORDANCE WITH MANUFACTURERS RECOMMENDATIONS.
6. SEE ARCHITECTURAL DRAWINGS FOR EXACT LOCATION AND INSTALLATION HEIGHT OF ALL PLUMBING FIXTURES & EXACT BUILDING DIMENSIONS.
7. INSULATE ALL HOT WATER, COLD WATER AND P-TRAPS WITH TRAP WRAP TO ADA REQUIREMENTS
8. ALL PLUMBING FIXTURE SUBSTITUTION SHALL BE BY ARCHITECT APPROVAL.
9. SEE PLUMBING EQUIPMENT SCHEDULE FOR SERVICE CONNECTIONS ON ALL FIXTURES.
10. MANIFOLD ALL PLUMBING VENTS ABOVE FLOOD LEVEL OF PLUMBING FIXTURES
11. PROVIDE CHROME-PLATE STEEL ESCUTCHEONS FOR PIPES AT WALL PENETRATIONS
12. HOT AND COLD WATER RUNS ARE 3/4" UNLESS OTHERWISE SPECIFIED.
13. ALL WATER RUNS ARE OVERHEAD. SLOPE TO DRAIN.
14. SEWER AND VENT RUNS ARE 2" UNLESS OTHERWISE SPECIFIED.
15. SEE SHEET P-2 FOR FIXTURE SCHEDULE.
16. CONTRACTOR TO VERIFY UTILITY CONNECTIONS LOCATION, SIZE AND INVERT.
17. CONTRACTOR TO PROVIDE ALL UTILITY EXTENSIONS, FEES, AND COORDINATION FOR GAS, WATER AND SEWER
18. INSTALL ALL PLUMBING ACCORDING TO 1997 UPC AND MECHANICAL TO 1997 UMC
19. ALL MECHANICAL WORK SHALL BE PERFORMED BY A LICENSED COMMERCIAL CONTRACTOR NORMALLY ENGAGED IN THE MECHANICAL TRADES AND IN COMPLIANCE WITH ALL CURRENT PLUMBING, MECHANICAL AND ADA CODE REQUIREMENTS
20. PLUMBING AND VENT SYSTEMS SHALL BE INSTALLED ACCORDING TO UPC, HOT AND COLD WATER PIPING IS INSTALL ACCORDING TO UPC. INSULATE HOT WATER AND COLD WATER SUPPLY PIPING WITH
21. 1" FIBERGLAS INSULATION. 1" INSULATION/ACCOUSTICAL PIPE WRAP FOR BOTH SUPPLY AND RETURN. SUGGESTED SUPPLIER: OSHEX B-10a LAG OR EQUIVALENT.
22. PIPE MATERIAL: TYPE L COPPER PIPE FOR DOMESTIC WATER.
23. AIR CHAMBER ABOVE DOMESTIC HOT AND COLD WATER LAVATORY STOPS. (TYPICAL)

LEGEND

VTR- VENT THRU ROOF

WCO- WALL CLEAN OUT

DCO- DOUBLE CLEAN OUT

FCO- FLOOR CLEAN OUT

FD- FLOOR DRAIN

W/D- WASHER BOX

FS- FLOOR SINK

EWC- ELECTRIC WATER COOLER

THE group
Telck-Hensley Engineering Group
4001 JUAN TABO NE, SUITE A
ALBUQUERQUE, NEW MEXICO 87111
Phone:(505)292-3202 FAX:(505)292-3904

WAYNE G. ANDREWS A.I.A.
ARCHITECT - PLANNER
4001 Juan Tabo N.E. Suite A
Albuquerque, New Mexico 87111
(505) 275-1764
Fax (505) 296-3471

POJOAQUE WELLNESS CENTER

PUEBLO OF POJOAQUE NEW MEXICO

PHASE 4

RAYMOND HENSLEY STATE OF NEW MEXICO 7873 REGISTERED PROFESSIONAL ENGINEER

5/6/03

JOB NO.	03-018
DATE:	MAR. 5, 2003
DRWN BY:	DRA
CHKD BY:	REH
REVISIONS	
SHEET NO	P-1

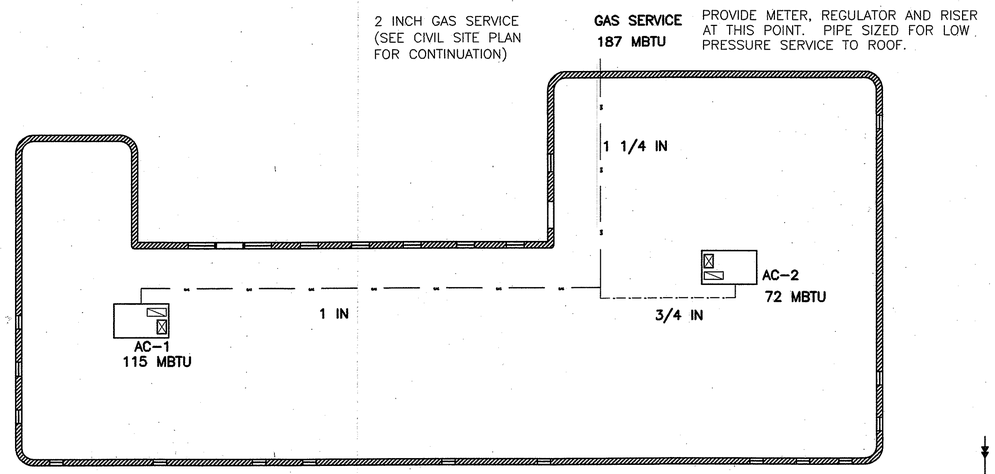

ROOF GAS PLAN
SCALE: 1/8" = 1'-0"

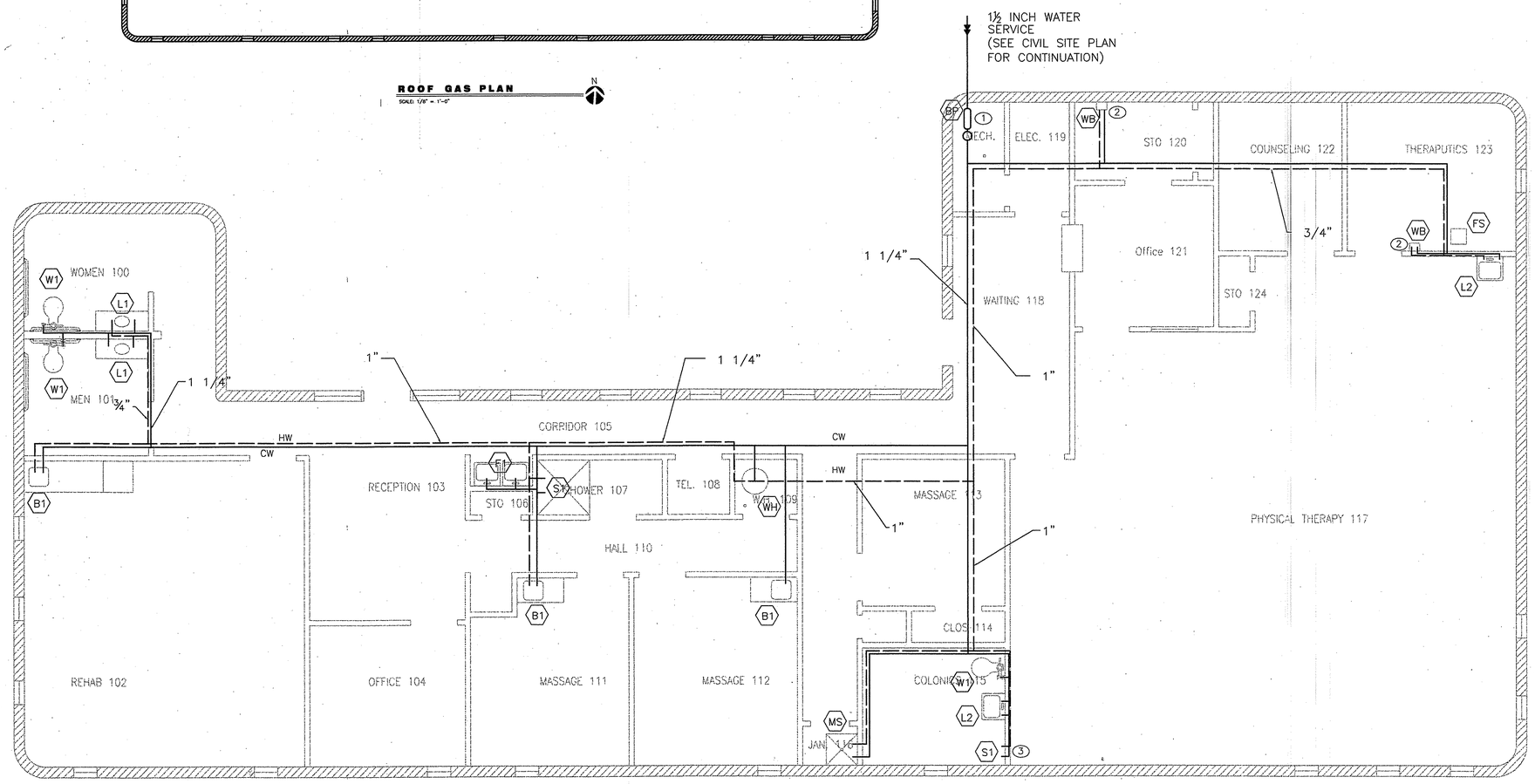

PLUMBING WATER PLAN
NORTH
SCALE: 1/4"=1'-0"

KEYED NOTES:

1. Booster pump
2. Washer box
3. Shower valve connected to colonic tank fill pipe.

PLUMBING SCHEDULE:

FLOOR DRAINS:

(FD) SMITH: MODEL 2005Y-A-02, 5"ø ROUND FLOOR DRAIN, WITH 2" OUTLET & TRAP SEAL. PROVIDE TRAP PRIMER VALVE & WATER LINE AT EACH LOCATION.

LAVATORY SINKS

(L1) SINK: SINK BY ELJER, VITREOUS CHINA ROBERTA LAVATORY, 22.5" SELF RIMMING, ADA, MODEL# 051-2954

FAUCET: FAUCET BY MOEN, 4" SWING-LEVER, ADA COMPLIANT MODEL# 8133-11468

(L2) SINK: SINK BY ELJER, 20"x18" WALL HUNG, VITREOUS CHINA DELWYN LAVATORY, MODEL# 051-2840

FAUCET: FAUCET BY MOEN, 4" SWING-LEVER, ADA COMPLIANT MODEL# 8133-11468

BAR SINKS

(B1) SINK: SINGLE BASIN STAINLESS STEEL SINK BY MOEN MODEL# 22106

FAUCET: FAUCET BY ELJER, SWING-LEVER, MODEL# 559-2550

WATER CLOSETS:

(W1) AMERICAN STANDARD: MODEL 3417.016 CADET ADA 16-1/2", ELONGATED FLUSH VALVE TOILET, VITREOUS CHINA, SIPHON JET, WATER SAVING, ADA COMPLIANT.

SLOAN: OPTIMA PLUS ROYAL #8111 FLUSHOMETER, AUTO FLUSHING, BATTERY POWERED, WATER SAVER.

BOOSTER PUMP

(BP) BOOSTER PUMP: PUMP BY PACO PUMPS, 1.5 HP, 1.25" DISCHARGE, 1.5" SUCTION (BOTH NPT),PACO MINIFLO MODEL#813A-824A

WASHER BOX

(WB) WILLOUGHBY INDUSTRIES MODEL HB-4

DRINKING FOUNTAINS

(F1) FOUNTAIN: BY OASIS, SPLIT-LEVEL WATER COOLER, 115V 60Hz, 4.6 AMPS, STAINLESS STEEL, 7.8 GPH, WITH P-TRAP

WATER HEATER:

(WH) A.O. SMITH: MODEL ELSF-30, ELECTRIC WATER HEATER, 240V 42Amp, 30 GAL CAPACITY

FLOOR SINK

(FS) SINK: BY SMITH, 12.5" SQUARE FLOOR SINK, WITH DOME BOTTOM STRAINER, MODEL# 3150.

SHOWERS:

(S1) AMERICAN STANDARD: AMARILIS 2077.501.002, PRESSURE BALANCE MIXING VALVE, VOLUME CONTROL, HOT LIMIT SAFETY STOP, VARIO ADJUSTABLE SHOWERWAND & HOSE, BRASS WALL ESCUTCHEON. ADA COMPLIANT.

FIAT: ACRYLIC SHOWER COMPARTMENT MODEL S-115 COMMANDER ADA COMPLIANT WITH DRAIN AND SHOWER CURTAIN.

MOP SINK:

(MS) FIAT: MODEL TSBCR-1000, MOP SINK, PRECAST TERRAZZO, 3" OUTLET, CORNER MODEL, WITH 6" DROP FRONT.

AMERICAN STANDARD: MODEL 8344.111, UTILITY FAUCET, TOP BRACE, VACUUM BREAKER, STOPS IN SHANKS, BRASS 4-ARM HANDLES, 10-3/4" SPOUT, 1/2" NPT FEMALE INLETS

LEGEND

——— COLD WATER

— — — HOT WATER

THE group
Telck-Hensley Engineering Group
4001 JUAN TABO NE, SUITE A
ALBUQUERQUE, NEW MEXICO 87111
Phone:(505)292-3202 FAX:(505)292-3904

WAYNE G. ANDREWS, A.I.A.
ARCHITECT - PLANNER
4001 Juan Tabo NE, Suite A
Albuquerque, New Mexico 87111
(505) 275-1764
Fax (505) 298-3471

POJOAQUE WELLNESS CENTER

PUEBLO OF POJOAQUE NEW MEXICO

PHASE 4

RAYMOND HENSLEY
STATE OF NEW MEXICO
7872
REGISTERED PROFESSIONAL ENGINEER
3/6/03

JOB NO.	03-018
DATE:	MAR. 5, 2003
DRWN BY:	DRA
CHKD BY:	REH
REVISIONS	
SHEET NO	P-2

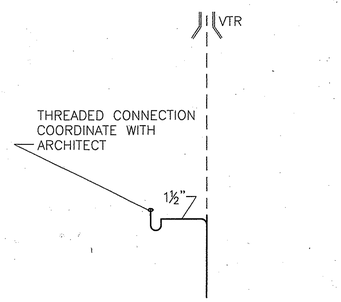

COLONIC TRAP DETAIL

SCALE: N.T.S.

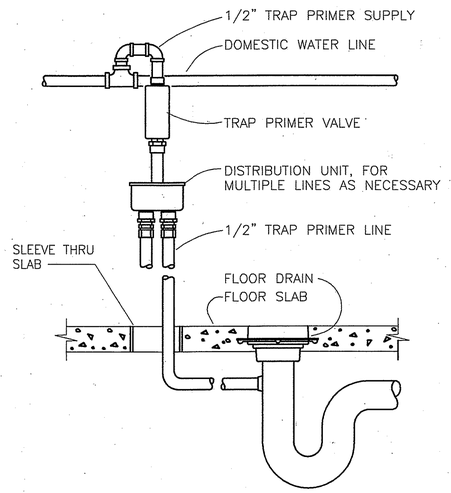

TRAP PRIMER DETAIL

SCALE: N.T.S.

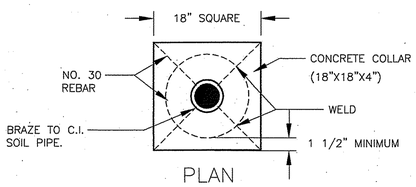

PLAN

NOTE: SEE MISCELLANEOUS PLUMBING EQUIPMENT SCHEDULE FOR DESCRIPTION.

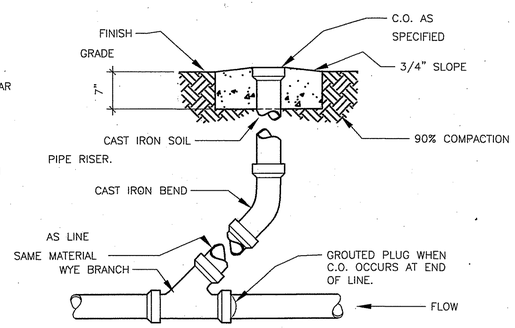

SECTION

EXTERIOR CLEAN OUT DETAIL

SCALE: N.T.S.

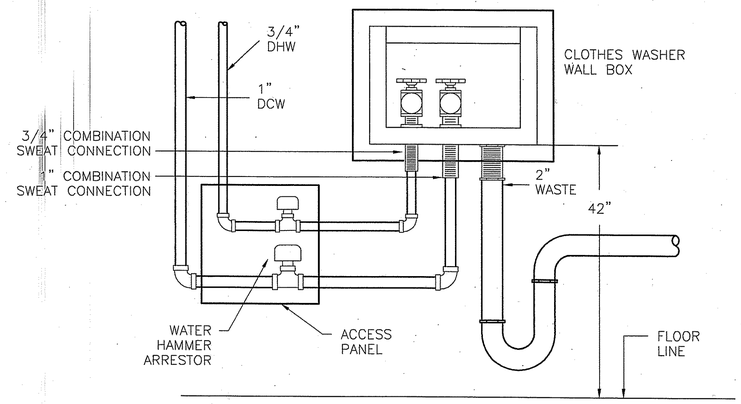

WASHER BOX DETAIL

SCALE: N.T.S.

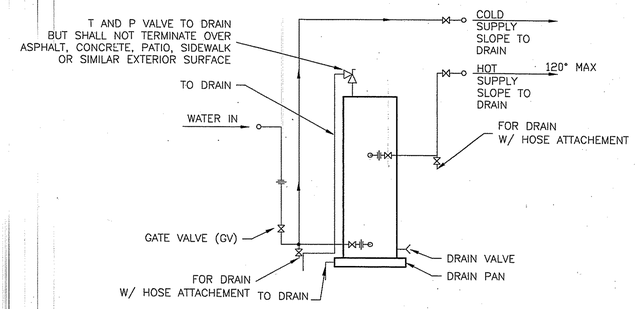

WATER HEATER DETAIL

SCALE: N.T.S.

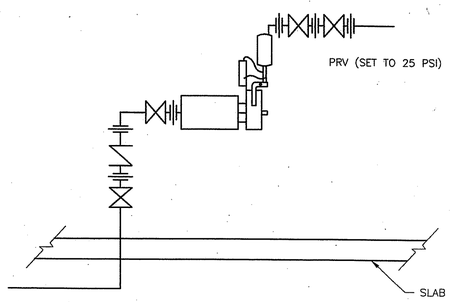

BOOSTER PUMP DETAIL

SCALE: N.T.S.

THE group

Telck-Hensley Engineering Group
4001 JUAN TABO NE, SUITE A
ALBUQUERQUE, NEW MEXICO 87111
Phone:(505)292-3202 FAX:(505)292-3904

WAYNE G. ANDREWS A.I.A.
ARCHITECT - PLANNER
4001 Juan Tabo NE, Suite A
Albuquerque, New Mexico 87111
(505) 275-1764
Fax (505) 299-3471

POJOAQUE WELLNESS CENTER

PUEBLO OF POJOAQUE NEW MEXICO

PHASE 4

RAYMOND HENSLEY STATE OF NEW MEXICO 7873 REGISTERED PROFESSIONAL ENGINEER
3/6/03

JOB NO.
DATE: MAR. 5, 2003
DRWN BY: DRA
CHKD BY: REH
REVISIONS

SHEET NO
P-3

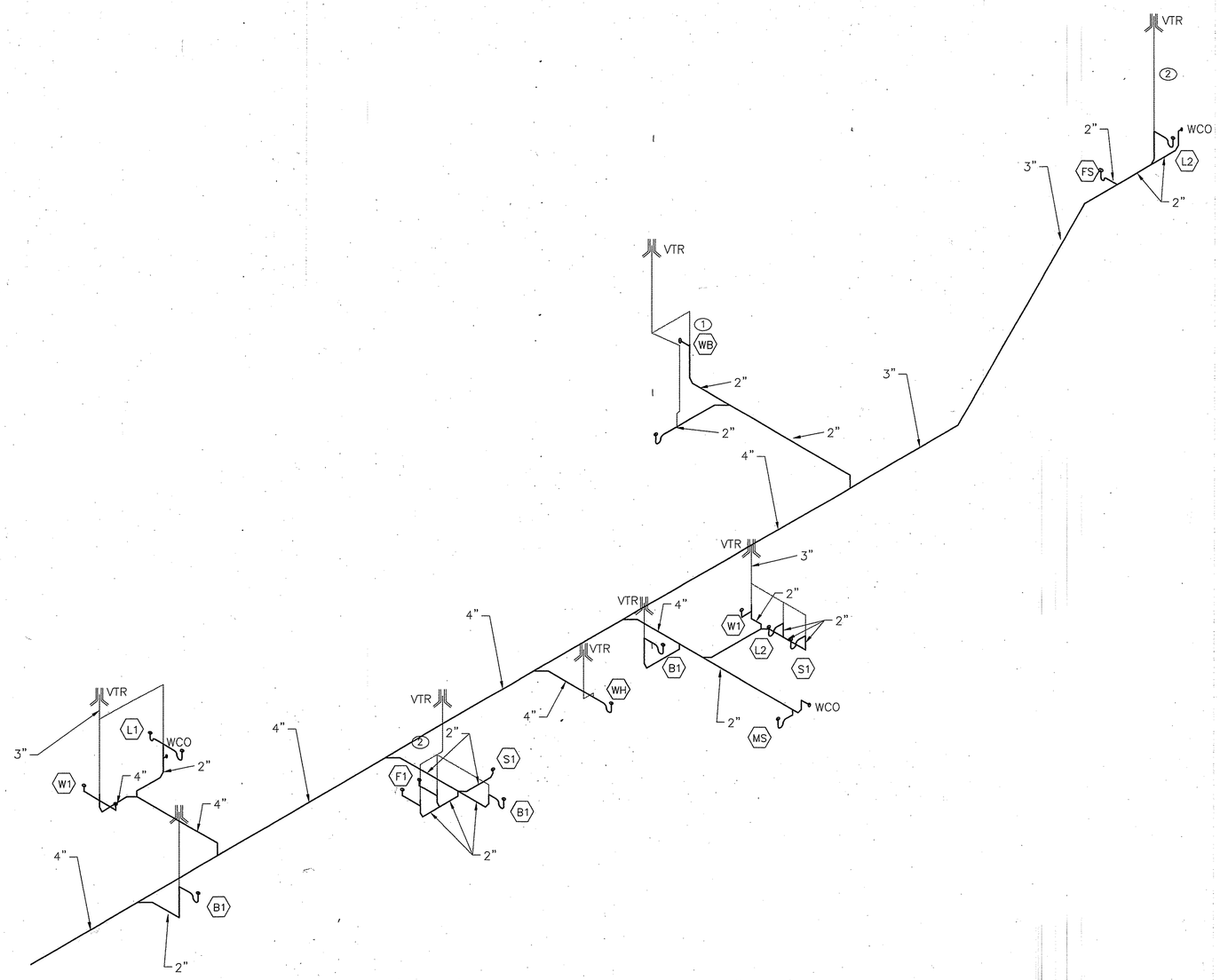

SEWER RISER DETAIL

SCALE: N.T.S.

KEYED NOTES:

1. SEE SHEET P-3 FOR DETAIL.
2. ALL VENT PIPES ARE 1½" UNLESS OTHERWISE NOTATED.

LEGEND

VTR– VENT THRU ROOF

WCO– WALL CLEAN OUT

THE group

Telck-Hensley Engineering Group
4001 JUAN TABO NE, SUITE A
ALBUQUERQUE, NEW MEXICO 87111
Phone:(505)292-3202 FAX:(505)292-3904

WAYNE G. ANDREWS A.I.A.
ARCHITECT - PLANNER
4001 Juan Tabo NE, Suite A
Albuquerque, New Mexico 87111
(505) 275-1764
Fax (505) 298-3471

POJOAQUE WELLNESS CENTER

PUEBLO OF POJOAQUE NEW MEXICO

PHASE 4

RAYMOND HENSLEY STATE OF NEW MEXICO 7873 REGISTERED PROFESSIONAL ENGINEER
3/6/03

JOB NO. 03-018
DATE: MAR. 5, 2003
DRWN BY: DRA
CHKD BY: REH
REVISIONS

SHEET NO
P-4

FIXTURE SCHEDULE

TYPE	MANUFACTURER	CATALOG NUMBER	DESCRIPTION/ LOCATION	LAMPS TYPE	LAMPS WATTS	LAMPS QTY.	MOUNTING INSTRUCTIONS	REMARKS
A	METALUX	2GC-332-A125-120-EB82	2x4 FLUOR. TROFFER W/ DUAL BALLAST	F032/ 3500K	32	3	RECESSED	
B	METALUX		1x4 PARABOLIC TROFFER -RESTROOMS-	2FU32/ 3500K	32	3	SURFACE	
C	PORTFOLIO	C6132-E-6151-LI	6" FLUOR. DOWN LIGHT -CORRIDOR-	TT	32	1	RECESSED	
D	LITHONIA	LGFV-32TRT-7FW-FFL-120	7" FLUOR. DOWN LIGHT -SHOWER-	TT	32	1	RECESSED	
E	ALL-PRO	ET700-ERT710	6" INCAN. DOWN LIGHT	R30	75	2	RECESSED	
F	METALUX	UTC-232A-120-EB81	1x4 FLUOR. WRAPAROUND -STORAGE-	F032/ 3500K	32	2	RECESSED	
G	STRICTLY SW	1001W TAN	WALL SCONCE-PORTALE-	R30	75	1	SURFACE	
EMW	SURE-LITE	CU-1-PCL	EMERGENCY LIGHT	---	---	---	UNIVERSAL	
EM	SURE-LITE	RG-1-WH	DOWN LIGHT/EMERGENCY LIGHT	---	---	---	RECESSED	
X	SURE-LITE	CCX-70-G-WH	EXIT LIGHT	---	---	---	UNIVERSAL	

GENERAL FIXTURE SCHEDULE NOTES

1. ALL FLUORESCENT FIXTURES SHALL BE PROVIDED WITH ELECTRONIC SOLID STATE BALLAST, MAGNETEK #B232I120L, SIMILAR AND EQUAL, AND SHALL BE PROVIDED WITH SYLVANIA OCTRON T8 LAMPS, SIMILAR AND EQUAL. REFER TO THE SPECIFICATIONS 16500.

2. PROVIDE 10% SPARE LAMPS FOR EACH TYPE OF LAMP AND WATTAGE. DELIVER TO OWNER IN ORIGINAL BOXES. PERCENTAGE OF SPARE LAMPS SHALL BE BASED UPON TOTAL NUMBER OF LAMPS SUPPLIED FOR THE PROJECT.

3. THE ARCHITECTURAL REFLECTED CEILING PLANS TAKE PRECEDENCE OVER THE LIGHTING PLANS SHOWN ON THE ELECTRICAL DRAWINGS. COORDINATE WITH ARCHITECTURAL REFLECTED PLANS AND COMPLY AS REQUIRED.

4. MOUNTING HEIGHTS OF FIXTURES ARE GENERALLY SHOWN ON THE ARCHITECTURAL ELEVATIONS. COORDINATE AND COMPLY AS REQUIRED.

5. PROVIDE A TOTAL OF FIVE (5) EXIT LIGHTS AND FIVE (5) TYPE "EM" FIXTURES, TO BE INSTALLED IN LOCATION AS DIRECTED BY THE FIRE MARSHALL, IN THE FIELD, DURING CONSTRUCTION. INCLUDE MINIMUM 30' OF CONDUIT AND WIRE TO BE CONNECTED TO THE CLOSEST UNSWITCHED EMERGENCY LIGHTING BRANCH CIRCUIT.

6. FIXTURE VOLTAGES SHALL BE COORDINATED WITH BUILDING VOLTAGE SYSTEM. ALL BALLASTED LIGHTING SHALL BE 120V.

7. FIXTURES SHALL BE COMPATIBLE WITH THE CEILING TYPE INSTALLED WITHIN; PROVIDE GRID TYPE FIXTURES INSTALLED IN LAY-IN GRID CEILINGS, AND PROVIDE FLANGE TYPE FIXTURES IN GYP BOARD AND HARD CEILINGS.

KEYED NOTES

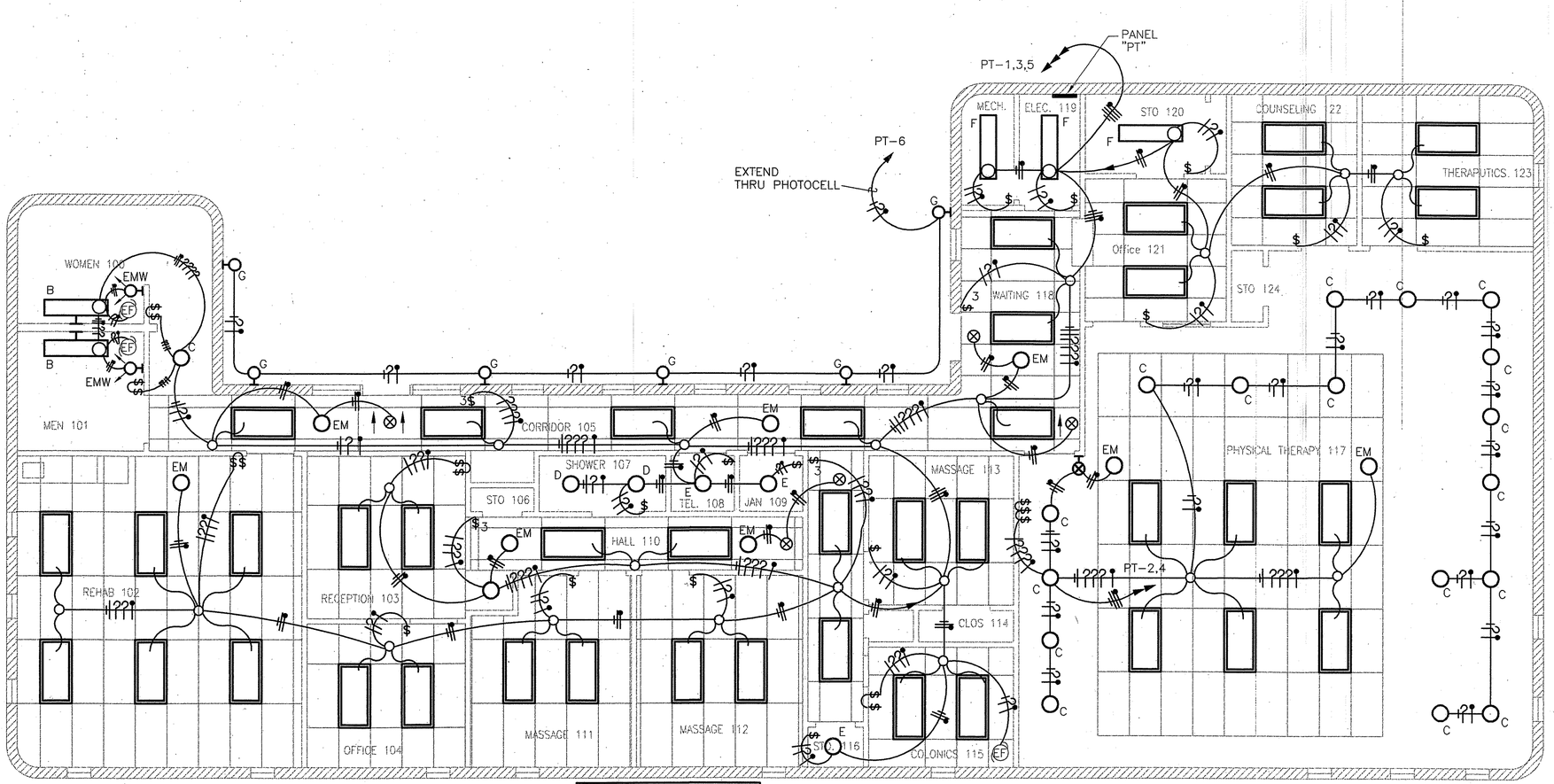

NOTE: ALL 2X4 TROFFERS SHALL BE TYPE "A" UNLESS OTHERWISE NOTED

FLOOR PLAN

SCALE: 1/4" = 1'-0"

N

WAYNE G. ANDREWS A.I.A.
ARCHITECT - PLANNER
4001 Juan Tabo N.E., Suite A
Albuquerque, New Mexico 87111
(505) 275-1764
Fax (505) 298-3471

POJOAQUE WELLNESS CENTER

PHASE 4

PUEBLO OF POJOAQUE NEW MEXICO

FREDRICK J. TELCK STATE OF NEW MEXICO 6037 REGISTERED PROFESSIONAL ENGINEER

THE group

Telck-Hensley Engineering Group
4001 JUAN TABO NE, SUITE A
ALBUQUERQUE, NEW MEXICO 87111
Phone:(505)292-3202
FAX:(505)292-3904

JOB NO.
DATE: MARCH 7, 2003
DRWN BY: CO
CHKD BY: FJT
REVISIONS

SHEET NO
E-1

03_J0985\03-018\POJOAQUE WELLNESS CENTER.E1

KEYED NOTES

PANEL SCHEDULE				
PANEL DESCRIPTION	CCT. NO.	CCT. BKR	WIRE SIZE	LOAD
PANEL "PT" 120/208V, 3ø, 4 WIRE, 200A, MB, TWO SECTION, 84 CIRCUIT, BOTTOM FEED, FLUSH MOUNT, DOOR-IN-DOOR SQUARE "D" NQOD OR EQUAL	1–40	20/1	#12 MIN	LIGHTS, RECEPT., EQUIP. & SPARES
	41	50/2	#8	WATER HEATER
	42–46	20/2	#12	EQUIPMENT
	47	60/3	#8	AC–1
	48	60/3	#8	AC–2
	49–84	1POLE	---	SPACE PROVISIONS

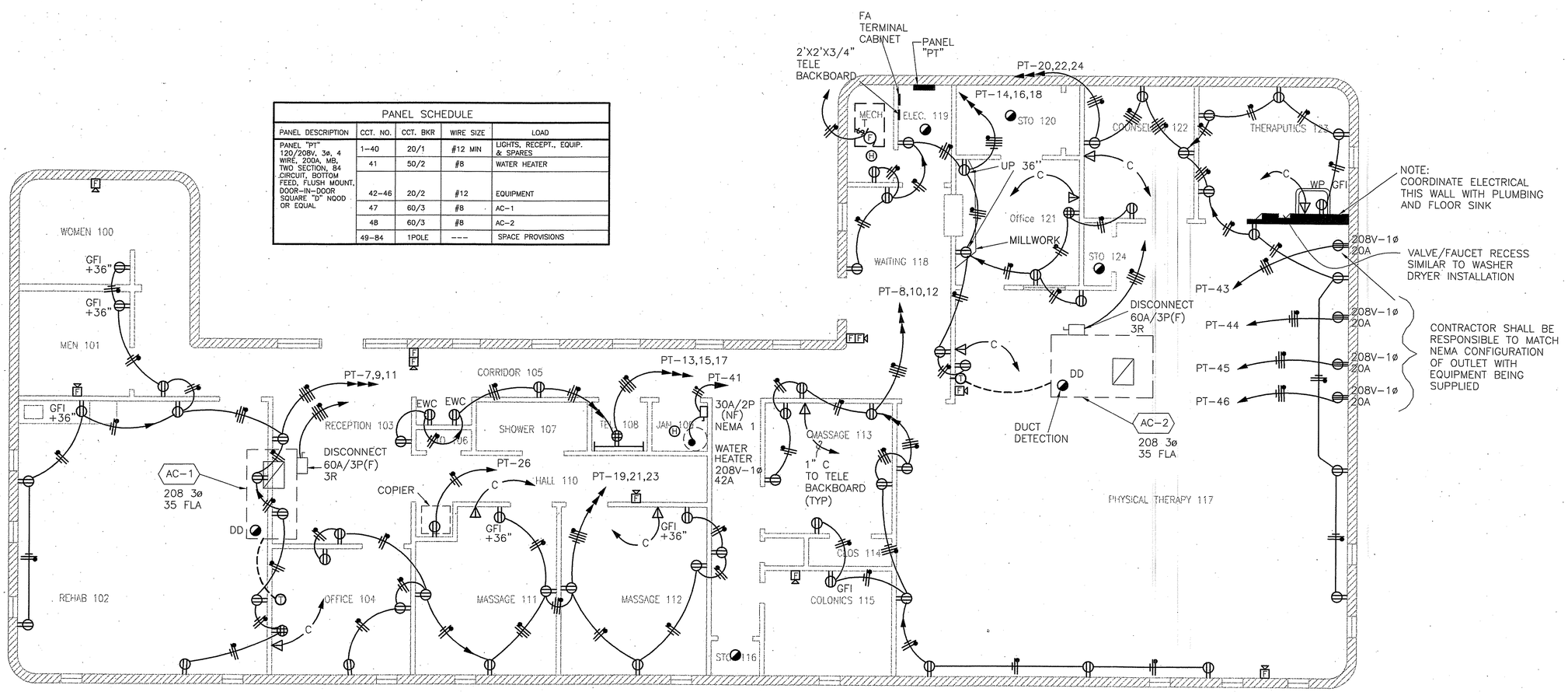

POWER FLOOR PLAN

SCALE: 1/4" = 1'-0"

N

03_JOBS\03-016\POJOAQUE WELLNESS CENTER\E2

WAYNE G. ANDREWS A.I.A.
ARCHITECT — PLANNER
4001 Juan Tabo N.E., Suite A
Albuquerque, New Mexico 87111
(505) 275-1784
Fax (505) 298-3471

POJOAQUE WELLNESS CENTER

PUEBLO OF POJOAQUE NEW MEXICO

PHASE 4

FREDERICK J. TELCK STATE OF NEW MEXICO 6297 REGISTERED PROFESSIONAL ENGINEER

03/03/03

THE group

Telck–Hensley Engineering Group
4001 JUAN TABO NE, SUITE A
ALBUQUERQUE, NEW MEXICO 87111
Phone:(505)292–3202
FAX:(505)292–3904

JOB NO.
DATE: MARCH 3, 2003
DRWN BY: CO
CHKD BY: FJT
REVISIONS

SHEET NO

E-2

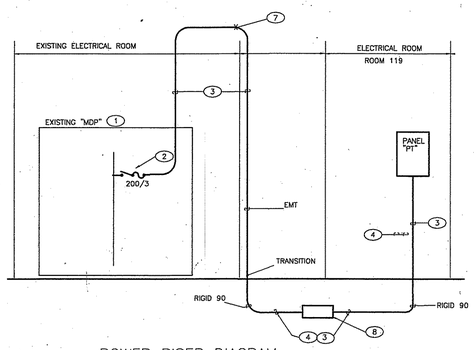

POWER RISER DIAGRAM

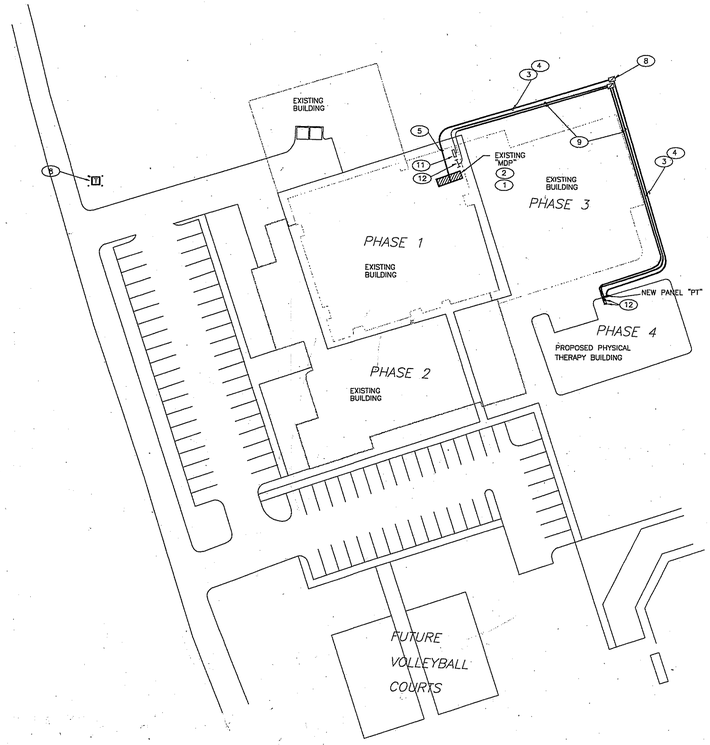

ELECTRICAL SITE PLAN SCALE: 1" = 30'-0"

KEYED NOTES

1. EXISTING 'MDP' IN PHASE 1 ELECTRICAL ROOM 105. REFER TO SITE PLAN FOR GENERAL LOCATION.
2. CONTRACTOR SHALL SUPPLY AND INSTALL A NEW 200A, 3 POLE FUSED SWITCH IN SPACE PROVISIONS OR IF SPACE IS UNAVAILABLE CONTRACTOR SHALL REMOVE SPARE 100A, 3 POLE FUSED SWITCH AND REPLACE WITH 200A, 3 POLE FUSED SWITCH FOR CONNECTION TO NEW PANEL "P1".
3. 3" CONDUIT WITH FOUR (4) #4/0 CONDUCTORS AND ONE (1) #2 GROUND PER KEYED NOTE 7.
4. UNDERGROUND 3" CONDUIT PER KEYED NOTE 3 PROVIDING EMT TO PVC TRANSITIONS WITH RIGID 90s AND COUPLINGS.
5. "X" INDICATES POINT OF EXIT FROM BUILDING. CONTRACTOR SHALL PROVIDE ADEQUATE SUPPORT. ROUTE AS SHOWN ON SITE PLAN THIS SHEET. SAW CUT EXISTING CONCRETE SIDEWALK AND PATCH TO MATCH.
6. LOCATION OF EXISTING JEMEZ MOUNTAIN CO-OP TRANSFORMER.
7. LOCATION OF EXISTING TELEPHONE PEDESTAL.
8. PROVIDE QUAZITE PULL BOX PG1730BB24 WITH HEAVY DUTY LID PG1730HA00.
9. NEW 1" FIRE ALARM CONDUIT WITH WIRES AS REQUIRED AND NEW 1 1/2 " C WITH PULL ROPE. INSTALL MIN 36" BELOW GRADE.
10. NEW FA AND TELE PULL BOX IN ELECTRICAL ROOM.
11. EXISTING FIRE ALARM CONTROL PANEL. CONNECT NEW FA WIRING TO EXISTING FACP.
12. EXISTING TELE BACKBOARD. STUB NEW CONDUIT AT BACKBOARDAND PROVIDE PLASTIC BUSHING.

PANEL SCHEDULE

PANEL DESCRIPTION	CCT. NO.	CCT. BKR	WIRE SIZE	LOAD
PANEL "P1" 120/208V, 3ø, 4 WIRE, 225A, ML, 200A BP MCB TWO SECTION, 84 CIRCUIT, BOTTOM FEED, FLUSH MOUNT, DOOR-IN-DOOR SQUARE "D" NOOD OR EQUAL	1-40	20/1	#12 MIN	LIGHTS, RECEPT., EQUIP. & SPARES
	41	50/2	#8	WATER HEATER
	42-46	20/2	#12	EQUIPMENT
	47	60/3	#8	AC-1
	48	60/3	#8	AC-2
	49-84	1POLE	----	SPACE PROVISIONS

SYMBOL LEGEND

SYMBOL	DESCRIPTION
	CEILING OR WALL BRACKET FIXTURE. SEE FIXTURE SCHEDULE.
	FLUORESCENT OUTLET AND FIXTURE. SEE FIXTURE SCHEDULE.
	POLE MOUNTED FIXTURE. SEE FIXTURE SCHEDULE.
	EXIT LIGHT. ARROWS INDICATE DIRECTIONAL ARROW ON FIXTURE.
	J-BOX ABOVE LAY-IN CEILING W/ FLEX CONDUIT TO LAY-IN FIXTURES
$	SINGLE POLE WALL SWITCH, UP +48".
$T	THERMAL O.L. SWITCH
$K	KEYED SWITCH, UP +48". SEE PLANS
$3	THREE WAY SWITCH, UP +48" TO CENTER.
	DUPLEX CONVENIENCE OUTLET, GROUNDING TYPE, UP +18" UNLESS OTHERWISE INDICATED
	TRIPLEX CONVENIENCE OUTLET, GROUNDING TYPE, UP +18" UNLESS OTHERWISE INDICATED
	SPECIAL PURPOSE OUTLET SEE PLANS FOR RATINGS
	250V-2P-4W SPECIAL PURPOSE GROUNDING OUTLET. AMPERAGE AS INDICATED.
	JUNCTION BOX FLUSH IN WALL WITH CONNECTION TO EQUIPMENT.
	COMBINATION DATA/VOICE, SINGLE GANG BOX MOUNTED STANDARD HEIGHT ABOVE FLOOR OR COUNTER TOP OR AS NOTED. PROVIDE 3/4" EMPTY CONDUIT TO ABOVE ACCESSIBLE CEILING SPACE. DATA/VOICE CABLING AND DEVICE BY OWNER.
	FLUSH FLOOR MOUNT DATA/VOICE DEVICE, CABLE AND DEVICE BY OWNER
	HEAT DETECTOR
	FIRE ALARM PULL STATION UP +48" SEE SPECS AND PLANS
	FIRE ALARM STROBE UP +80", SEE SPECS AND PLANS
	FIRE ALARM HORN/STROBE UP +80" SEE SPECS AND PLANS
	FIRE ALARM SMOKE DETECTOR. COMBINATION IONIZATION/PHOTOELECTRIC
	TRANSFORMER. SEE PLANS AND RISER DIAGRAM.
	THERMOSTAT, UP 48" UNLESS OTHERWISE INDICATED.
	DISCONNECT SWITCH. SIZE AND POLES FOR LOAD CONNECTED.NEMA 3R
	ELECTRIC PANEL. SEE PANEL SCHEDULE FOR CHARACTERISTICS.
	MOTOR CONNECTION, FRACTIONAL H.P (LESS THAN 1/3 HP)
	CEILING MOUNTED SPEAKER.
	CONDUIT STUB-UP ABOVE ACCESSIBLE CEILING
	BRANCH CIRCUIT IN WALLS OR CEILING WITH CONDUCTORS INDICATED.
	BRANCH CIRCUIT IN WALLS OR UNDER FLOOR, CONDUCTORS INDICATED.
	BRANCH CIRCUIT NUMBERS INDICATED. IE: NEUTRAL, HOT(PHASE), SWITCH LEG/TRAVALER, GROUND RESPECTIVELY.
	HOME RUN TO PANEL, WITH BRANCH CIRCUIT NUMBERS INDICATED.

WAYNE G. ANDREWS A.I.A.
ARCHITECT - PLANNER
4001 Juan Tabo N.E. Suite A
Albuquerque, New Mexico 87111
(505) 275-1764
Fax (505) 298-3471

POJOAQUE WELLNESS CENTER

PHASE 4

NEW MEXICO

PUEBLO OF POJAQUE

FREDERICK T. TELCK
STATE OF NEW MEXICO
6297
REGISTERED PROFESSIONAL ENGINEER
03-07-03

THE group
Telck-Hensley Engineering Group
4001 JUAN TABO NE, SUITE A
ALBUQUERQUE, NEW MEXICO 87111
Phone:(505)292-3202
FAX:(505)292-3904

JOB NO.
DATE: MARCH 7, 2003
DRWN BY: CO
CHKD BY: FJT
REVISIONS

SHEET NO
E-3

G:_JOBS\00-01\POJOAQUE WELLNESS CENTER\E3

WELLNESS CENTER PHASE 4